TCO DEVELOPMENT

TCO Certified Notebooks 5.0

11 November 2015

Contents - TCO Certified Notebooks

Certification Support

If you would like to certify your products and need support in understanding TCO Certified, this criteria document and the certification process, TCO Development's test and verification partners around the world are available to help clarify this document and assist you with certification in your native language.

For a list of accredited test and verification partners, contact certification@tcodevelopment.com or log onto www.tcodevelopment.com

Introduction

TCO Certified is an international third party sustainability certification for IT products. By choosing TCO Certified computers, displays and other devices, businesses and organizations around the world are able to help meet environmental and social challenges associated with electronics.

Since the end of the 1980s, TCO Development has advanced the sustainable development of IT products. Today our international certification system – TCO Certified – makes it easier to choose sustainably designed and manufactured IT products such as displays, computers, smartphones and tablets. TCO Certified is a third party certification, Type 1 Eco Label according to ISO14024.

Sustainability in all life cycle phases

Electronics are associated with many different sustainability risks throughout the life cycle, including manufacturing, use and end of life phases. Criteria in TCO Certified aim to address many of these challenges throughout the life cycle, making it the most comprehensive third party certification for IT products. For each criteria area in this document, the relevant life cycle phase is indicated by the following icons:

Criteria – Manufacturing phase
Socially responsible manufacturing, environmental management system.

Criteria – use phase
Climate, ergonomics, health and safety, extended product life and emissions.

Criteria – end of life phase
Reduction of hazardous content and chemicals, design for recycling

With every major update we aim to enhance the criteria in line with technology innovation and sustainability challenges. Updates are a result of dialog with key stakeholders, such as purchasers, users, industry, and subject matter experts. This criteria document, TCO Certified Notebooks 5.0, is the fifth version of TCO Development's certification of Notebooks. Moving forward, subsequent versions, 5.1, 5.2 etc., may be released. However, these are to be considered only as updates within the fifth version, with improved precision of the mandates and test methods.

Citing from these criteria (e.g. in procurement contracts) is permitted, provided that the source is disclosed and the extent of the quotation is consistent with sound copyright practice. For further information, please visit www.tcodevelopment.com.

TCO Development, Stockholm, November, 2015

A Criteria

A.1 General information

This document contains requirements, test methods and references for Notebook computers with a display size > 6”.

Notebook definition

A *Notebook computer* is defined as a portable stand-alone portable computer that is primarily for battery mode usage and may have a touch screen interface. A Notebook includes a keyboard, a display, a processor unit and memory storage device. Devices such as Internal floppy drive, CD-drive, DVD-drive etc are optional extras. Other terminologies related to Notebook Computers are: Laptop, Netbook, Portable Computer, etc. Operation shall be possible via an integrated battery. Notebooks with detachable keyboards are still considered Notebooks and not Tablet computers if they are to be sold specifically as Notebook computers.

The criteria document setup

The aim of this criteria document is to provide relevant criteria and test methods covering all life cycle phases of the product. Criteria are set so that 30-50% of the products available on the market can pass. This criteria document consists of two parts; Part A- the mandated criteria and Part B - clarifications and test methods.

Compliance

Compliance with the mandates in this document can be achieved in one of two ways; either through a test report or through a verification report. Compliance methods can vary by criterion and are specified under each mandate.

1. A test report is defined as a report based on:
   - Testing conducted by the facility issuing the test report for the product identified in the report.
2. A verification report is defined as a summary report and a verdict (pass or fail) based on either:
   - A test report issued by the same facility
   - A test report issued by a different facility.
   - Declarations, certificates or other proof from the Company or Brand owner applying for the certificate.

The options accepted by TCO Development for each criterion can be found under each mandate.

A.1.1 Information to End-Users

Background

It is important that the purchaser of a product that has been certified in accordance with TCO Certified Notebooks receive information concerning the quality, features and capabilities of the product. This information is based on the viewpoint from the user's perspective that TCO Development represents.

Applicability

All Notebook computers.

Life Cycle Phases

Clarification

See B.1.1

References

The contract between TCO Development and the Applicant/Brand owner.

Mandate A.1.1:

An information document called "TCO Certified Document" provided by TCO Development shall accompany the product to describe why these particular criteria have been chosen for the products within the TCO Certified program, and what is expected to be achieved by them. The document shall be written in English or the native language where the product is to be sold.

Examples of how the document can accompany the product:

- As a separate printed document.

- As a digital file or printed in the user manual.

- As a direct link from the user manual or digital file to the document on the manufacturer's web site.

Submit the following to an approved verifier:

1. Information on how the TCO Certified Document accompanies the product

2. A written guarantee that the above mandate is fulfilled. The document shall be signed by the responsible person at the applicant company

Submit the following together with the application to TCO Development:

A copy of a verification report from a test facility approved by TCO Development.

We hereby guarantee that the above mandate is fulfilled.

……	……
Product brand name	Model name(s)
.....	.....
Signature	Name and title in block capitals
.....	.....
Date	Company

A.2 Visual ergonomics

Good visual ergonomics is a very important aspect of quality that can also have a direct effect on the health, comfort and performance of the user. Good ergonomics, such as a high quality display image, can also influence our productivity and extend the usable life of a product. In this way, ergonomic design can also offer sustainability benefits.

In developing criteria for visual ergonomics, the possible health effects of various parameters have been taken into account. Other features that characterise high quality displays have also been in focus when developing these criteria.

TCO Development used three main methodologies to determine suitable levels and test methods for the visual ergonomics criteria:

1. Acceptable visual levels, as determined by scientific research.
2. Statistics from tests carried out in accordance with TCO Development, ISO, MPR regulations and from specialized VDU tests.
3. Manufacturers' knowledge and experience, which is invaluable. Manufacturers, consumer groups and other organisations with interests in the visual ergonomics field have contributed a great deal of valuable information and ideas throughout the development process.

Life Cycle Phase

A.2.1 Image detail characteristics

A.2.1.1 Native display resolution requirement

Background

Image quality is negatively affected by a low fill factor, visible "jaggies", poor rendering of details, etc. All of these parameters are related to the resolution of the display. For display resolution characteristics, it is important to take the viewing distance into account.

The viewing distance in this criteria document is defined as 1.5× the display diagonal, but no less than 400 mm, which could be considered an absolute minimum viewing distance for comfortable viewing. This means that the mandate on resolution is independent of the display size and viewing distance but dependent on the aspect ratio. Only the aspect ratio needs to be known.

Definition

A *pixel* is the smallest addressable imaging element of the Notebook display capable of reproducing a full range of luminance and colours.

The *native display resolution* is the number of pixels in the horizontal direction by the number of pixels in the vertical direction that the display can present.

Applicability

All Notebook computers.

Test procedure

See B.2.1.1.

References

2.

Mandate A.2.1.1:

The pixel density shall be ≥ 30 pixels/degree visual angle

Submit the following together with the application to TCO Development:

A copy of a test report and a verification report from a test facility approved by TCO Development.

A.2.2 Luminance characteristics

A.2.2.1 Luminance level

Background

It shall be possible to set the luminance level according to the lighting conditions of the surroundings. Poor luminance can lead to low contrast and consequently affect legibility and colour discrimination and thus lead to misinterpretations. It shall be possible to set a sufficiently high and low luminance levels with respect to the ambient lighting in order to present a comfortable viewing situation and to avoid eyestrain.

Definition

Luminance being emitted from a particular area is a measure of the luminous intensity per unit area of light travelling in a given direction and falls within a given solid angle.

The unit of luminance is cd/m^2.

Applicability

All Notebook computers.

Test procedure

See B.2.2.1.

References

1, 2, 18, 22, 28 and 32.

Mandate A.2.2.1:

The maximum luminance shall be ≥150 cd/m^2. Also applicable for at least one battery mode.

Submit the following together with the application to TCO Development:

A copy of a test report and a verification report from a test facility approved by TCO Development.

A.2.2.2 Luminance uniformity

Background

When poor luminance uniformity is visible, it can locally affect the contrast and consequently the legibility of information on the display. The areas of deviating luminance can have different sizes and cause varying contour sharpness.

Definition

Luminance uniformity is the capacity of the Notebook display to maintain the same luminance level over the whole active screen area. The luminance uniformity is defined as the ratio of maximum to minimum luminance within the fully active screen area.

Applicability

All Notebook computers.

Test procedure

See B.2.2.2.

References

1, 2, 16, 18, 22, 23, 28, 33 and 34.

Mandate A.2.2.2:

Luminance variation across the active screen, L_{max} : L_{min} shall be ≤ 1.60.

Submit the following together with the application to TCO Development:

A copy of a test report and a verification report from a test facility approved by TCO Development.

A.2.2.3 Luminance uniformity - angular-dependence

Background

The luminance of a Notebook display is angular-dependent, i.e. screen luminance decreases when the display is viewed slightly from the side, either horizontally or vertically. This can have a negative effect on contrast and can affect the legibility of the display.

Definition

Luminance uniformity – angular dependence, is the capacity of the Notebook display to maintain a certain luminance level independently of the viewing direction. The angular-dependent luminance uniformity is defined as the ratio of maximum luminance to minimum luminance in the specified measurement areas.

Applicability

All Notebook computers.

Test procedure

See B.2.2.3.

References

1, 16, 23, 28, 33, 33 and 34.

Mandate A.2.2.3:

In landscape mode, when the screen is rotated around the vertical axis through the centre of the screen the mean value of the Lmax to Lmin ratios at ±15° shall be ≤ 3.00.

Submit the following together with the application to TCO Development:

A copy of a test report and a verification report from a test facility approved by TCO Development.

A.2.3 Luminance contrast characteristics

A.2.3.1 Luminance contrast – characters

Background
The degree of contrast is important for legibility and for distinguishing one character from another.

Definition
Luminance contrast – characters is the capacity of the Notebook display to maintain an adequate luminance difference between a bright background and dark characters or parts of characters over the whole active area.

Luminance contrast – characters is expressed as the ratio of the L_{max} to L_{min} difference over the sum of L_{max} and L_{min}, in accordance with Michaelson's formula.

Applicability
All Notebook computers.

Test procedure
See B.2.3.1.

References
2, 16, 19, 23, 24, 28 and 33.

Mandate A.2.3.1:

The character luminance contrast shall be ≥ 0.70 measured orthogonally to the screen.

Submit the following together with the application to TCO Development:

A copy of a test report and a verification report from a test facility approved by TCO Development.

A.2.3.2 Luminance contrast – angular dependence

Background

For a product with a display, the luminance and consequently the contrast on the display is angular-dependent. Luminance variations can influence both the bright white and the dark areas of the screen, causing a change in contrast. This can have a negative effect on the legibility of the display.

Definition

Luminance contrast – angular dependence, is the capability of the Notebook display to maintain the same contrast regardless of the direction from which the screen is viewed. Luminance contrast – angular dependence, is expressed as the ratio of the L_{max} to L_{min} difference over the sum of L_{max} and L_{min}, in accordance with Michaelson's formula. It is measured at two different angles.

Applicability

All Notebook computers.

Test procedure

See B.2.3.2.

References

2 16, 20, 24, 29 and 34.

Mandate A.2.3.2:

In landscape mode, the luminance contrast-angular dependence shall be ≥ 0.80 at ± 15° horizontally from the viewing direction (rotated around the vertical axis through the centre of the screen).

Submit the following together with the application to TCO Development:

A copy of a test report and a verification report from a test facility approved by TCO Development.

A.2.4 Screen colour characteristics

A.2.4.1 Correlated colour temperature, CCT variation

Background

If the Notebook computer is equipped with a pre-set correlated colour temperature setting the user should expect that the colour hue of the correlated colour temperature setting is close to the one indicated by the pre-set. This makes it possible to more accurately evaluate the colour of an image on the Notebook display compared to real scenes or prints.

Physical measurements of colour stimuli can only give an indication of the colour appearance in a practical situation. The colour of the frame, the spectral composition of the lighting, the colour of various areas in the visual field, and the complexity of brightness variations in the visual field all influence the colour appearance of a Notebook display image.

Normal daylight has a correlated colour temperature in the range 5000 – 10000 K.

Definition

The *correlated colour temperature* is a measure of the perceived screen colour expressed in kelvin (K).

Applicability

All Notebook computers.

Test procedure

See B.2.4.1.

References

2, 3, 4, 8, 9, 10, 11, 14, 15, 25, 26, 27, 29, 31 and 35.

Mandate A.2.4.1:

The correlated colour temperature of the active display shall be in the range 5000K to 10000K.

For Notebooks with Correlated Colour Temperature pre-sets, each pre-set shall have a colour difference $\Delta u'v' \leq 0.012$ when compared to CIE u' and v' chromaticity co-ordinates for corresponding correlated colour temperatures.

Submit the following together with the application to TCO Development:

A copy of a test report and a verification report from a test facility approved by TCO Development.

A.2.4.2 Colour uniformity

Background

The human visual system is very sensitive to changes in colour hue in white and grey areas. Since the white or grey colour hues are the background on which most colours are judged, the white or grey areas are the reference colours on the screen.

Patches of colour variation on an active white or grey screen could reduce the contrast locally, be disturbing and affect the legibility, colour rendering and colour differentiation.

Definition

The *colour uniformity* of a Notebook display is the capability to maintain the same colour in any part of the screen.

Applicability

All Notebook computers.

Test procedure

See B.2.4.2.

References

2, 8, 14, 15, 24, 26, 30 and 36.

Mandate A.2.4.2:

The maximum colour deviation between measured active areas on the screen that are intended to maintain the same colour shall be $\Delta u'v' \leq 0.012$.

Submit the following together with the application to TCO Development:

A copy of a test report and a verification report from a test facility approved by TCO Development.

A.2.4.3 RGB settings

Background

Accurate colour rendering is important when realistic colour images or colour presentations are presented on the Notebook display. Poor colour rendering can lead to poor legibility and misinterpretation. The u' and v' chromaticity co-ordinates of the primary colours red (R), green (G) and blue (B) of the screen shall aim at values given in international IEC, EBU and ITU standards. The u' and v' chromaticity co-ordinates of the primary colours R, G and B form a triangle in the CIE 1976 uniform chromaticity scale diagram. The larger the area of the triangle, the wider the range of colours the screen is capable of presenting.

The colour characteristics of a Notebook display are based on the visual appearance of the Notebook display primary colour stimuli, the R, G, B-stimuli.

Applicability

All Notebook computers.

Test procedure

See B.2.4.3.

References

3, 4, 8, 9, 10, 11, 12, 13, 14, 15, 26, 27, 29, 31 and 35.

Mandate A.2.4.3:

The minimum colour triangle shall **have the following co-ordinates:**

	Red		Green		Blue	
Co-ordinate	**u'**	**v'**	**u'**	**v'**	**u'**	**v'**
Requirement	**≥0.375**	**≥ 0.503**	**≤0.160**	**≥0.548**	**≥0.135**	**≤0.305**

Submit the following together with the application to TCO Development:

A copy of a test report and a verification report from a test facility approved by TCO Development.

A.2.4.4 Colour uniformity – angular dependence

Background

The human visual system is very sensitive to changes in colour hue in white and grey areas. Since the white or grey colour hues are the background on which most colours are judged, the white or grey areas are the reference colours on the screen. Angular-dependent colour variations on an active white or grey screen could be disturbing and affect legibility, colour rendering and colour differentiation.

Definition

The *colour uniformity – angular dependence* of a Notebook display is the capability of the display to maintain constant colour over the screen surface depending of the direction from which the screen is viewed.

Applicability

All Notebook computers.

Test procedure

See B.2.4.4.

References

2, 8, 14, 15, 24, 26, 30 and 36.

Mandate A.2.4.4:

In landscape mode, the Δu'v' between areas on the left side and the right side of the screen when it is positioned at +15° and at –15° horizontally to the screen normal (rotated around the vertical axis through the centre of the screen) shall be ≤ 0.025.

Submit the following together with the application to TCO Development:

A copy of a test report and a verification report from a test facility approved by TCO Development.

A.2.4.5 Colour greyscale linearity

Background

A well-tuned colour greyscale is the basis for good colour rendering on the screen. This is measured via steps in a greyscale on the screen. Each greyscale step shall have similar colour hues in order to simplify colour interpretation and, to avoid confusion for the user, only the luminance shall vary.

Definition

Colour greyscale linearity is the capability of the screen to maintain the same u', v' co-ordinates of a greyscale pattern at all greyscale levels, i.e. only the luminance shall change from one greyscale step to the next.

Applicability

All Notebook computers.

Test procedure

See B.2.4.5.

References

2, 8, 14, 15, 24, 26, 30 and 36.

Mandate A.2.4.5:

Table A.2.5.5

	Maximum Δu´v´difference					
Greyscale	**255**	**225**	**195**	**165**	**135**	**105**
255	0					
225	**0,045**	0				
195	**0,045**	**0,045**	0			
165	**0,050**	**0,050**	**0,050**	0		
135	**0,055**	**0,055**	**0,050**	**0,050**	0	
105	**0,055**	**0,055**	**0,055**	**0,055**	**0,050**	0

The Δu'v' ≤ the maximum allowed difference for each step according to table A.2.4.5

Submit the following together with the application to TCO Development:

A copy of a test report and a verification report from a test facility approved by TCO Development.

A.2.5 Reflection characteristics

A.2.5.1 Key cap marking contrast

Background

The contrast between the key marking and its background is of special importance for Notebook computers, which often are used in low light or a complex lightning environment where it might be difficult to read the markings. Dark key caps with markings in other colours, even white, can cause difficulties in reading the markings when working in darker environments, due to insufficient contrast between the key markings and the surrounding keyboard. Therefore it is preferred that the Notebook computer keyboard has positive polarity, i.e. dark key markings on a light coloured keyboard.

Definition

Key cap marking contrast is the modulation of the luminance from the key cap markings in relation to the luminance from the key cap background and under specified lighting and measurement conditions.

Key cap marking contrast is expressed as the L_{max} to L_{min} difference over the sum of L_{max} and L_{min}, in accordance with Michaelson's formula.

Applicability

All character keys and numerical keys on the keyboard of a Notebook computer.

Test procedure

See B.2.5.1.

References

12, 17, 21, 37 and 38.

Mandate A.2.5.1:

The key cap marking contrast shall be ≥ 0.70 measured orthogonally to the keyboard.

Submit the following together with the application to TCO Development:

A copy of a test report and a verification report from a test facility approved by TCO Development.

A.2.5.2 Keyboard gloss

Background

Keyboard gloss influences visual comfort and legibility by drawing attention away from the visual task at hand. The higher the gloss value, the more likely it is that the surface will create irritating specular reflections (mirror-like reflections) from ambient lighting. If the gloss value is high enough, the problem of reflection images can occur.

Definition

Gloss is a measure of how a light beam, physically described as luminous flux, is scattered at the surface when incident against that surface. Gloss is a function of the directional reflectance properties of a surface.

Applicability

All Notebook computers.

Test procedure

See B.2.5.2.

References

5, 6 and 7.

Mandate A.2.5.2:

The gloss of the keyboard (keys) shall have a gloss value G(60°) ≤30 gloss units.

Submit the following together with the application to TCO Development:

A copy of a test report and a verification report from a test facility approved by TCO Development.

A.3 Workload ergonomics

Workload ergonomics refers to the adaptation of the task, tools, workspace and physical environment where the product will be used. These criteria are put in place in order to meet the user's needs for a good work environment.

Together with an ever-widening user base, increased functionality in mobile telephony and rapid data transfer via mobile telephone subscribers, the use of Notebook computers has increased. For many users, Notebook computers have now replaced stationary equipment. Today's Notebook computer has just as much computing capacity as a stationary desktop whilst it offers more flexibility in where it can be used.

The ergonomic functions and design of Notebook computers limit the ability to optimise their viewing distance or vary their work posture and movement.. Users of Notebook computers should have the same ergonomic conditions that are provided by stationary, desktop-based displays, keyboards, mouse and computers.

Those who use a Notebook computer as a stationary unit should be able to connect them to an external display, keyboard and pointing device (mouse, digital pen, etc.) either as separate units or via docking stations.

Life Cycle Phase

A.3.1 Separate display, keyboard and input device

Background

Many users see an advantage in being able to utilise a Notebook computer as their sole computer. To ensure both good ergonomics and a functional work space, it shall be possible to connect an external display, keyboard and pointing device, as separate parts or via a docking station.

Definition

A *docking station* is a hardware frame and set of electrical connection interfaces that enable a Notebook computer to effectively serve as a stationary computer.

Applicability

Notebook computers with accessories.

Reference

37-49, 54 and 55.

Mandate A.3.1:

It shall be possible to connect and use a separate display, keyboard and pointing device (e.g. mouse), as separate parts or via an adapter or *docking station*, to the Notebook computer.

Submit the following together with the application to TCO Development:

A copy of a verification report from a test facility **approved by TCO Development.**

A.3.2 Keyboard

Background

The keyboard shall be stable and it should be possible to rest the hands against it without causing unwanted commands to be executed. It shall be possible for users to feel that they have pressed a key based on the key's mechanical resistance.

Applicability

All Notebook computers > 12".

Reference

37,40-42,44-48,50,51,53 and 54.

Mandates A.3.2:

For notebooks with a screens size > 12" The keyboard design shall follow ISO 9241-4:1998(E) 6.2.3: The key displacement shall be between 1.5 and 6.0 mm, the initial resistance shall be between 25% and 75% and the key resistance shall be between 0.5 N and 0.8 N, applying at the "snap point".

For "ultra thin" Notebooks that have a thickness smaller or equal to 25mm the key displacement may be between 1.0 and 6.0 mm.

Submit the following together with the application to TCO Development:

A copy of a test report from a test facility **approved by TCO Development**.

A.4 Emissions

Many people find acoustic noise annoying, especially high-pitched noise. To prevent annoyance, TCO Development sets criteria to limit the noise from products with integrated fans.

A.4.1 Acoustic noise

Background

Acoustic noise from fans, disk drives etc. can be annoying. To prevent such annoyance, the aim is for the IT product to cause a minimum of noise during usage. Many end-users are sensitive to noise with different characteristics. To give the end-user a possibility to choose a product with a comfortable noise level and frequency characteristics generated by a product, this information should be declared together with all other data relevant to the product in question.

Definitions

To be able to provide information about acoustic noise levels that permits comparison between different Notebook computers the declared A-weighted sound power level (L_{WAd}) in operating and idling mode measured in accordance with ISO 9296 p.4.4.1 in bels (B) shall be reported. The following definitions apply:

Sound power level (L_W):
Total emitted sound power from a sound source, given in bels (B) and with the reference 1 pW.

A-weighting:
The measured linear sound level (sound pressure or sound power) weighted against the sensitivity of the human ear for different frequencies (A-curve).

Declared A-weighted sound power level (L_{WAd}): in bels (B). Defined in accordance with ISO 9296 3.2.5.

Operating mode. A condition in which the system and hard disk drive shall be operated in accordance with ECMA-74 C.15.3.2 and C.9.3.2.

Idling mode. A condition in which the system shall be operated in accordance with ECMA-74 C.15.3.1.

Applicability

All Notebook computers with integrated moving parts.

Life Cycle Phase

Test procedure
See B 4.1 and ISO 7779:2010.

References
56-62.

Mandate A.4.1:
For Notebook computers with integrated moving parts, such as motor driven hdd, fans, etc.

1. The *declared A-weighted sound power level* (LWAd) shall not exceed:

***Operating mode:* 3.9 B**
***Idling mode:* 3.5B**

If the product **does not emit prominent discrete tones according to procedures specified in ECMA 74 Annex D a higher declared A-weighted sound power level (LWAd) is accepted but shall not exceed:**

***Operating mode:* 4.2B**
***Idling mode:* 3.8B**

2. The A-weighted sound power level for a product shall be declared in the product data sheet and/or in any other product descriptions.

Submit the following together with the application to TCO Development:
A copy of a test report and a verification report from a test facility approved by TCO Development.

A.5 Electrical safety

A.5.1 Electrical safety

Background

Electrical safety concerns the electrical design of apparatus with respect to its electrical insulation and other arrangements that are intended to prevent accidents resulting from contact with live components, and the risk of fire or explosion as a result of electrical flash-over due to inadequate or faulty electrical insulation.

Applicability

All Notebook computers with built-in power supplies as well as any external power supply intended to be used together with the Notebook computer.

Life Cycle Phase

References

63.

Mandate A.5.1:

The Notebook computer and external power supply/supplies shall be certified in accordance with EN/IEC 60950 or EN/IEC 60065 or EN 62368-1.

Submit the following together with the application to TCO Development:

A copy of the CB certificate or national certificate from a CB member (NCB).

A.6 Environment

This section details the environmental criteria in TCO Certified, which offer a unique, integrated balance of environmental issues in the manufacturing, use and end of life phases of the product.

The environmental criteria are divided into the following sections:

1. Manufacturing – criteria focusing on the manufacturing phase and environmental management
2. Climate – energy consumption, one of the most important issues in the environmental impact of IT products.
3. Hazardous Substances – heavy metals, flame retardants, plastics.
4. Material resource efficiency – factors to extend the life of the product and influence better use of material resources.
5. End of life – factors to stimulate recycling and minimize the impact of e-waste.

Potential environmental effects are evident at each stage of the product life cycle. The environmental criteria TCO Development has focused on in this document are those that we consider most relevant to the product group. They have also proved to be attainable in volume manufacturing and are verifiable. Future criteria updates will likely focus on the manufacturing phase, hazardous substances and climate issues.

Compliance with these criteria, (except section *A.6.3 Climate)* is verified by sending the requested information to a verifier approved by TCO Development. The energy consumption requirements in section A.6.3 shall be tested at a test facility approved by TCO Development or an EPA approved test facility.

Life Cycle Phases

A.6.1 Product description

Background

The aim of this product description is to provide third party verified information about the product. The information is used by TCO Development to verify that the product complies with the criteria in TCO Certified.

The information is also provided on the certificate to buyers so that it helps them calculate the sustainability impact of the products and the benefit of buying products that fulfil TCO Certified.

Using the declared sustainability information a buyer can, for example, implement climate compensation or other sustainability-related measures connected to the sustainability impact of the product. This data is often used by organisations in their annual sustainability report or internal programs aimed at minimizing the environmental impact of IT.

Definition

Recycled plastic is post-consumer recycled plastic, which has been used in products.

Plastic parts are all product parts made out of plastic except panels, electronic components, cables, connectors, PWBs, insulating mylar sheets and labels. This is primarily due to insufficient available alternatives. This also means that the weight of these items is not included when calculating the total weight of the plastic in the product in this requirement.

Marking plate /Marking label is the label that contains the product's electrical rating in terms of voltage, frequency, current and the manufacturer's name, trademark or identification mark together with the manufacturer's model or type reference. The label shall be in accordance with IEC 60 950:1 clause 1.7.1.

Applicability

All Notebook computers and the equipment specified in requirement A.1.1 supplied with them.

Life Cycle Phases

Clarification

B.6.1

References

63

Mandate A.6.1:

A product declaration shall be provided for the Notebook computer. The following information shall be verified by the third party facility and is printed by TCO Development on the certificate.

Submit the following to an approved verifier:

1. The declaration below, completed where applicable.

2. A copy of the marking label for the Notebook computer and any external power supply.

The information submitted shall be signed by the responsible person at the applicant company.

Submit the following together with the application to TCO Development:

A copy of a verification report including all information in the table below from a verifier approved by TCO Development and a copy of the marking label.

Notebook computer declaration

Notebook computer	**Information**
Manufacturer	
Brand name	
Brand Owner	
Type/Model name	
Product Family name	

Panel	**Information**
Brand name	
Type/ Model name	
Size and technology	

External Power supply: brand & model name	**Rating and Class**

Battery: brand & model name	**Technology (e.g. Li-ion), rating & characteristics**

Declared sustainability information

Percentage of *recycled plastic* by weight of total weight of plastic parts	
Total weight of the product and power supply (without packaging) in Kg	

Measured energy consumption according to Energy Star. *(This measured value of one sample may differ from declared values presented in other places due to a batch uncertainty that is normally added to cover all products leaving the production line)*			
Short Idle	Long Idle	Sleep mode	Off mode

We hereby guarantee that the above mandate is fulfilled.

…… ……
Product brand name Model name(s)

....
Signature Name and title in block capitals

....
Date Company

A.6.2 Manufacturing

A.6.2.1 Environmental management system certification

Background
A certified environmental management system shows that the company has chosen to work in a systematic way with constant improvement of the environmental performance of the company and its products. A certified environmental management system includes external independent reviews.

Definitions
Manufacturing plant: Manufacturing facility where the final assembly of the TCO Certified product takes place.

Applicability
The company or companies which manufacture the Notebook computer.

Life Cycle Phase

Clarification
B.6.2.1

References
64 and 65.

Mandate A.6.2.1:

Each *manufacturing plant* must be certified in accordance with ISO 14001, or EMAS registered. If the product is manufactured by a third party, it is this company that shall be certified or registered.

Submit the following to an approved verifier:

1. A document showing the names and addresses of the manufacturing plants.

2. Copy of the ISO 14001 certificate or EMAS registration from each manufacturing plant.

3. A written guarantee that the certificate/registration is valid and that the mandate above is fulfilled, signed by the responsible person at the applicant company.

Submit the following together with the application to TCO Development:

A copy of a verification report from a verifier approved by TCO Development.

We hereby guarantee that the above mandate is fulfilled.

……	……
Product brand name	Model name(s)
.....	.....
Signature	Name and title in block capitals
.....	.....
Date	Company

A.6.3 Climate

A.6.3.1 Energy consumption

Background

Energy is the single most important topic in the issue of climate change. Energy efficient equipment is an important and effective way to fight climate change. With an ever-increasing volume of IT equipment in use, the efficiency of each product is vital.

This requirement and test method is based on the most recently published Energy Star® standard for computers.

Definitions

The energy consumption requirement in accordance with the most recently published Energy Star standard for computers.

Applicability

All Notebook computers.

Life Cycle Phase

Test procedure

B.6.3.1

References

70.

Mandate A.6.3.1:

The energy consumption requirements in the most recently published Energy Star® standard for computers on the date of application shall be fulfilled and verified through testing by a test facility approved by TCO Development or at any EPA approved test facility accredited according to ISO17025.

Submit the following together with the application to TCO Development:

A copy of a test report and a verification report from a test facility approved by TCO Development.

A.6.3.2 Energy consumption – external power supply

Background

Energy is the single most important topic in the issue of climate change. Energy efficient equipment is an important and effective way to fight climate change. With an ever-increasing volume of IT equipment in use, the efficiency of each product is vital. To reduce energy consumption from the product the external power supply shall comply with the International Efficiency Marking Protocol for External Power Supplies.

Applicability

All external power supplies.

Clarification

B.6.3.2

References

71.

Mandate A.6.3.2

The external power supply shall meet at least the International Efficiency Protocol requirement for level V.

Submit the following to the verifier at the test facility:

A copy of the marking label for the external power supply

Submit the following together with the application to TCO Development:

A copy of the marking label for the external power supply

A.6.4 Hazardous substances

A.6.4.1 Cadmium (Cd), mercury (Hg), lead (Pb) and hexavalent chromium (CrVI)

Background

The effects of cadmium, mercury, lead and hexavalent chromium are well documented as substances that are hazardous to both our health and the environment. Electronic devices contain hazardous substances like heavy metals and brominated flame retardants. This causes problems both in the use phase (additives can leak from the plastic and accumulate in dust, harming both our health and the environment) and at end-of-life, where uncontrolled recycling can cause the release of toxins such as dioxins and furans.

This criterion is harmonized with EU RoHS2 Directive (2011/65/EU), except that TCO Certified does not allow mercury in the display panel backlight. As TCO Certified is a global certification, this also affects products sold outside the EU.

Applicability

All Notebook computers.

Life Cycle Phase



Clarification

B.6.4.1

References

72 and 73.

Mandate A.6.4.1:

The Notebook computer shall not contain cadmium, mercury, lead and hexavalent chromium

Submit the following to an approved verifier:

A written guarantee that the above mandate is fulfilled. The guarantee shall be signed by the responsible person at the applicant company.

Submit the following together with the application to TCO Development:

A copy of a verification report from a verifier approved by TCO Development.

We hereby guarantee that the above mandate is fulfilled.

……	……
Product brand name	Model name(s)
.....	.....
Signature	Name and title in block capitals
.....	.....
Date	Company

A.6.4.2 Halogenated substances

Halogenated flame retardants and plasticizers are often persistent, can bio-accumulate in living organisms and have been detected in both humans and the environment. These substances may be problematic in the manufacturing and end of life phases where workers or the environment can be exposed. They can also migrate from the products during the use phase with unknown health effects as a result.

Definitions

Plastic parts are parts made mainly of plastics, e.g. the housing. Parts containing other materials in any significant amounts, e.g. cables with metal conductors, are not included in the definition.

Printed wiring board laminate is a printed board that provides point-to-point connections but not printed components in a predetermined configuration on a common base.

Halogens are a group of five chemically related non-metallic elements in the Periodic Table; fluorine, chlorine, bromine, iodine and astatine.

Polybrominated biphenyls (*PBB*) and Polybrominated diphenyl ethers (*PBDE*) are restricted in the RoHS directive (2002/95/EC) due to the hazardous properties of these substances. Hexabromocyclododecane (*HBCDD*) has been identified as a Substance of Very High Concern in accordance with EU REACH criteria due to PBT (persistent, bio accumulative, toxic) properties.

Applicability

All Notebook computers.

Clarification

B.6.4.2

References

74.

Mandate A.6.4.2:

1. ***Plastic parts*** **weighing more than 25 grams shall not contain flame retardants or plasticizers that contain halogenated substances.**

Note*:* This applies to plastic parts in all assemblies and sub-assemblies. Exempted are *printed wiring board laminates*, electronic components and all kinds of cable insulation.

2. **The Notebook computer shall not contain PBB, PBDE and HBCDD.**

Note: This applies to components, parts and raw materials in all assemblies and sub-assemblies of the product e.g. batteries, paint, surface treatment, plastics and electronic components.

Submit the following to an approved verifier:

A written guarantee that the above mandate is fulfilled. The guarantee shall be signed by the responsible person at the applicant company.

Submit the following together with the application to TCO Development:

A copy of a verification report from a verifier approved by TCO Development.

We hereby guarantee that the above mandate is fulfilled.

……	……
Product brand name	Model name(s)
.....	.....
Signature	Name and title in block capitals
.....	.....
Date	Company

A.6.4.3 Non-halogenated substances

Background

The purpose of this mandate is to increase the knowledge of substances with regards to their human and environmental impacts and to drive a shift towards less hazardous alternatives. These substances may be problematic in the manufacturing and end of life phase where workers or the environment can get exposed and can also migrate from the products during the use phase with unknown health effects as a result.

The mandate uses the hazard assessment and decision logic framework called GreenScreen™ for Safer Chemicals developed by the non-profit organization Clean Production Action (CPA). The GreenScreen methodology can be used for identifying substances of high concern and safer alternatives.

The GreenScreen criteria are in line with international standards and regulations including the Globally Harmonized System of Classification and Labelling of Chemicals (GHS), OECD testing protocols and the European REACH Regulation. The U.S. EPA's Design for Environment (DfE) Alternatives Assessment is also an important influence on the GreenScreen™ for Safer Chemicals.

Definitions

Plastic parts are parts made mainly of plastics, e.g. the housing. Parts containing other materials in any significant amounts, e.g. cables with metal conductors, are not included in the definition.

Printed wiring board laminate is a printed board that provides point-to-point connections but not printed components in a predetermined configuration on a common base.

Licenced Profilers are organisations approved by CPA with the capacity to provide GreenScreen assessments.

Accepted substances are considered the most sustainable alternatives which are possible for the industry to use, also taking into consideration aspects such as availability and functionality. Accepted substances are found on the TCO Development website under *"Accepted Substances list"*.

Applicability

All Notebook computers.

Clarification

B.6.4.3

Mandate A.6.4.3:

Non halogenated flame retardants used in plastic parts that weigh more than 25 grams shall be on the publically available Accepted Substance List for TCO Certified. This means that the substance has been assessed by a licensed profiler according to GreenScreen™ and been assigned a benchmark score ≥ 2

The following acceptance decisions apply to substances given Benchmarks 4, 3, 2, 1 or designated U (undefined):

4: Accepted – (Few concerns)

3: Accepted – (Slight concern)

2: Accepted – (Moderate concern)

1: Not accepted - (High concern)

U: Not accepted - (Unspecified)

All substances of a flame retardant mixture shall be accounted for. Non-accepted components shall not exceed concentration levels of 0.1% by weight of the flame retardant.

Exempted are *printed wiring board laminates*, electronic components and all kinds of cable insulation.

A grace period for the above may be granted, see B.6.4.3 for rules

TCO Development will conduct spot-checks and require full disclosure of the flame retardants, including CAS number, used in the product to verify that the obligations according to this mandate are fulfilled.

Submit the following to an approved verifier:

A written guarantee that the above mandate is fulfilled. The guarantee shall be signed by the responsible person at the applicant company.

Submit the following together with the application to TCO Development:

A copy of a verification report from a verifier approved by TCO Development.

We hereby guarantee that the above mandate is fulfilled.

……	……
Product brand name	Model name(s)
.....	.....
Signature	Name and title in block capitals
.....	.....
Date	Company

A.6.4.4 Halogenated plastics

Background

PVC is by far the most common halogen containing plastic. There are however other plastics that contain halogens in the plastic itself. Halogens are problematic from both a health and environmental perspective throughout the product life cycle and should be phased out.

Definitions

Plastic parts are parts made mainly of plastics, e.g. the housing. Parts containing other materials in any significant amounts, e.g. cables with metal conductors, are not included in the definition.

Printed wiring board laminate is a printed board that provides point-to-point connections but not printed components in a predetermined configuration on a common base.

Halogens are a group of five chemically related non-metallic elements in the Periodic Table; fluorine, chlorine, bromine, iodine and astatine.

Applicability

All Notebook computers.

References

73 and 77

Mandate A.6.4.4:

***Plastic parts* in the Notebook computer weighing more than 25 grams shall not contain intentionally added halogens as a part of the polymer.**

Note: *Printed wiring board laminates*, and all kinds of internal and external cable insulation are not considered to be part of *plastic parts* and are therefore not included in the mandate.

Submit the following to an approved verifier:

A written guarantee that the above mandate is fulfilled. The guarantee shall be signed by the responsible person at the applicant company.

Submit the following together with the application to TCO Development:

A copy of a verification report from a verifier approved by TCO Development.

We hereby guarantee that the above mandate is fulfilled.

……	……
Product brand name	Model name(s)
.....	.....
Signature	Name and title in block capitals
.....	.....
Date	Company

A.6.4.5 Phthalates

Background
Phthalates are substances mainly used as plasticizers. The substances restricted in the mandate are listed as Substances of Very High Concern and are included in REACH Annex XIV classified as toxic to reproduction. These substances are problematic from both a health and environmental perspective throughout the product life cycle and should be phased out.

Applicability
All Notebook computers.

Clarification
B.6.4.5

References
66, 67, 82, 83, 84 and 85

Mandate A.6.4.5:

The Notebook computer shall not contain Bis (2-ethylhexyl) phthalate (DEHP), Butyl benzyl phthalate (BBP), Dibutyl phthalate (DBP), and Diisobutyl phthalate (DIBP). No parts of the product are exempted.

Submit the following to an approved verifier:

A written guarantee that the above mandate is fulfilled. The guarantee shall be signed by the responsible person at the applicant company.

Submit the following together with the application to TCO Development:

A copy of a verification report from a verifier approved by TCO Development.

We hereby guarantee that the above mandate is fulfilled.

……	……
Product brand name	Model name(s)
.....	.....
Signature	Name and title in block capitals
.....	.....
Date	Company

A.6.4.6 Hazardous substances in product packaging

Background

Packaging constitutes a well-known environmental problem and is regulated in many countries worldwide. Packaging material has a short lifetime and generates large volumes of waste.

There are three main areas of concern, content of hazardous substances, use of resources and transport volume. These banned substances are problematic from both a health and environmental perspective throughout the package life cycle and should be phased out.

Applicability

All packaging material.

Clarification

B.6.4.6

References

62.

Mandate A.6.4.6:

The packaging material shall not contain lead (Pb), cadmium (Cd), mercury (Hg) or hexavalent chromium (Cr6).

Plastic packaging material shall not contain organically bound halogens.

Submit the following to an approved verifier:

A written guarantee that the mandate above is fulfilled. The guarantee shall be signed by the responsible person at the applicant company.

Submit the following together with the application to TCO Development:

A copy of a verification report from a verifier approved by TCO Development.

We hereby guarantee that the above mandate is fulfilled.

……	……
Product brand name	Model name(s)
.....	.....
Signature	Name and title in block capitals
.....	.....
Date	Company

A.6.5 Material Resource Efficiency

A.6.5.1 Lifetime extension

Background

A longer product lifetime makes a significant, positive contribution to more efficient resource use as well as the reduction of air and water pollution. A pre-condition for prolonged lifetime is that the product is of high quality, which is supported by good warranties. Another requirement is the availability of spare parts for a number of years once the product is taken out of production. During this period, products should, where possible, be repaired and not replaced.

Definitions

Brand owner: The company or organization owning or controlling the *Brand Name*.
Brand Name: The name or sign, including but not limited to a trademark or company name, used to identify, amongst users and customers, the manufacturer or seller of a product.
Product Warranty is a period where the Brand owner offers to repair or replace broken products during a period of time at no charge.
Spare parts are those parts that have the potential to fail during normal use of the product. Product parts whose life cycle usually exceeds the average usual life of the product need not be provisioned as spare parts. When the cost for replacing a broken part (e.g. panel) exceeds the cost of replacing the whole product, then that part need not be considered as a spare part under this mandate.

Applicability

All Notebook computers.

Life Cycle Phases


Clarification

B.6.5.1

Mandate A.6.5.1:

1. **The *brand owner* shall provide a *product warranty* for at least one year on all markets where the product is sold.**

2. **The *brand owner* shall guarantee the availability of *spare parts* for at least three years from the time that production ceases. Instructions on how to replace these parts shall be available to professionals upon request.**

Submit the following to an approved verifier:

A written guarantee that the above mandate is fulfilled. The guarantee shall be signed by the responsible person at the *brand owner* company.

Submit the following together with the application to TCO Development:

A copy of a verification report from a verifier approved by TCO Development.

We hereby guarantee that the above mandate is fulfilled.

……	……
Product brand name	Model name(s) or "All products"
.....	.....
Signature	Name and title in block capitals
.....	.....
Date (Declaration valid 1 year from date)	Brand Owner Company

A.6.6 End of life

A.6.6.1 Material coding of plastics

Background

Prolonging the life of IT-products by reuse is the best way to minimize the environmental impact of IT-products. But when this is no longer possible it is important to facilitate material recycling of the products. Material coding of plastics aims at making the recycling of plastics easier so that the plastic can be used in new IT equipment.

Definitions

Plastic parts are parts made mainly of plastics, e.g. the housing. Parts containing other materials in any significant amounts, e.g. cables with metal conductors, are not included in the definition.

Printed wiring board laminate is a printed board that provides point-to-point connections but not printed components in a predetermined configuration on a common base.

Applicability

All Notebook computers.

Life Cycle Phase

Clarification

B.6.6.1

References

75, 78 and 79.

Mandate A.6.6.1:

Plastic parts weighing more than 25 grams shall be material coded in accordance with ISO 11469 and ISO 1043-1, -2, -3, -4.

Exempted are *printed wiring board laminates*.

The following information shall be submitted to an approved verifier:

A written guarantee that the above mandate is fulfilled. The guarantee shall be signed by the responsible person at the applicant company.

The following information shall be submitted with the application to TCO Development:

A copy of a verification report from a verifier approved by TCO Development.

We hereby guarantee that the above mandate is fulfilled.

……	……
Product brand name	Model name(s)
.....	.....
Signature	Name and title in block capitals
.....	.....
Date	Company

A.6.6.2 Take back system

Background

The amount of electronic waste in the world today is enormous and a growing environmental problem. It is important that manufacturers provide mechanisms to take back their equipment at end-of-life under the principle of individual producer responsibility, wherein each manufacturer must be financially responsible for managing its own branded products at end-of-life. Currently much electronic waste is being exported to developing countries where it is managed unsustainably and disproportionately burdens those regions with this global environmental problem. The Basel Convention and its decisions govern the export of many types of electronic waste, however it is not properly implemented in all countries. With this mandate TCO Development aims to influence the expansion of better electronic waste management practices to more countries.

Definition

Brand owner is the company that owns the brand name visible on the product.

Take back system is a system that makes sure that the customer can return used products to be recycled. The system can be with or without a fee.

Environmentally acceptable recycling methods are:

- Product and component reuse
- Material recycling with secured handling of hazardous chemicals and heavy metals
- Pollution-controlled energy recovery of parts of the product

Applicability

All Notebook computers.

Clarification

B.6.6.2

References

80.

Mandate A.6.6.2:

The *brand owner* (or its representative, associated company or affiliate) shall offer their customers the option to return used products for *environmentally acceptable recycling methods* in at least one market where the product is sold and where electronics take back regulation is not in practice at the date of application.

The following information shall be submitted to an approved verifier:

The information stated in the list below shall be submitted and the guarantee signed by the responsible person at the *brand owner* company.

The following information shall be submitted with the application to TCO Development:

A copy of a verification report from a verifier approved by TCO Development.

The requirement can be fulfilled by one of the following options (to be verified):

☐ 1. Product only sold on markets with WEEE legislation or similar

☐ 2. World-wide product take back*

☐ 3. One additional market lacking WEEE legislation where product take back is offered*

Name of market……

*The brand owner shall also submit a short description, to an approved verifier, of the take back system or reference to the representative, associated company or affiliate taking care of the take-back system

We hereby guarantee that the above mandate is fulfilled.

……	……
Product brand name	Model name(s) or "All products"
……	……
Signature	Name and title in block capitals
……	……
Date (Declaration valid 1 year from date)	Brand Owner Company

A.6.6.3 Preparation for recycling of product packaging material

Background

Packaging constitutes a well-known environmental problem and is regulated in many countries worldwide. Packaging material has a short lifetime and generates large volumes of waste.

There are three main areas of concern; hazardous substance content,, use of resources and transport volume.

Applicability

All packaging material.

Mandate A.6.6.3:

Non-reusable packaging components weighing more than 25 grams shall be possible to separate into single material types without the use of tools.

Exempted is reusable packaging.

The following information shall be submitted to an approved verifier:

A written guarantee that the mandate above is fulfilled. The guarantee shall be signed by the responsible person at the applicant company.

The following information shall be submitted with the application to TCO Development:

A copy of a verification report from a verifier approved by TCO Development.

We hereby guarantee that the above mandate is fulfilled.

……	……
Product brand name	Model name(s)
.....	.....
Signature	Name and title in block capitals
.....	.....
Date	Company

TCO DEVELOPMENT

DECLARATION FORM FOR TCO CERTIFIED NOTEBOOKS 5.0 ENVIRONMENTAL REQUIREMENTS

Applicant company

By signing this Declaration Form the Company confirms that the Company has read and accepts to be bound by the below listed environmental requirements as stated in this criteria document. The signature of this form is to be considered equal to a signature under each of the below listed individual mandates in this criteria document. The text in this form is compressed to save space so please make sure to read the full explanation under each mandate. Check the boxes for the documents that have been attached to this form.

A.1.1 TCO Certified Document
A.6.1 Product description
☐Completed product declaration form
☐Copy of the marking label for Notebook computer and external power supply
A.6.2.1 Environmental management system certification
☐Addresses of manufacturing plants
☐Valid EMAS certificate or ISO 14001 certificate
A.6.4.1 Cadmium, mercury, lead and hexavalent chromium
A.6.4.2 Halogenated substances
A.6.4.3 Non-halogenated substances
A.6.4.4 Halogenated plastics
A.6.4.5 Phthalates
A.6.4.6 Hazardous substances in product packaging
A.6.6.1 Material coding of plastics
A.6.6.3 Preparation for recycling of product packaging material

We hereby guarantee that the above mandate is fulfilled.

……	……
Product brand name	Model name(s)
.....	.....
Signature	Name and title in block capitals
.....	.....
Date	Company

DECLARATION FORM FOR TCO CERTIFIED NOTEBOOKS 5.0 ENVIRONMENTAL REQUIREMENTS

Brand owner

By signing this Declaration Form the Company confirms that the Company has read and accepts to be bound by the below listed environmental requirements as stated in this criteria document. The signature of this form is to be considered equal to a signature under each of the below listed individual mandates in this criteria document. The text in this form is compressed to save space so please make sure to read the full explanation under each mandate. Check the boxes for the documents that have been attached to this form.

A.6.5.1 Lifetime extension

A.6.6.2 Take back system

☐1. Product only sold on markets with WEEE legislation or similar

☐2. World-wide product take back*

☐3. One additional market lacking WEEE legislation where product take back is offered*

*☐ Short description or reference of the above

We hereby guarantee that the above mandate is fulfilled.

……	……
Product brand name	Model name(s) or "All product"
.....	.....
Signature	Name and title in block capitals
.....	.....
Date (Declaration valid 1 year from date)	Company

A.7 Socially responsible manufacturing

Shorter product cycles and growing demand for new technologies put increasing pressure on industry and its complex supply chain to deliver new devices faster and at a low cost. The result is often inadequate working conditions at manufacturing facilities, long working hours, low wages and a lack of health and safety measures.

TCO Development aims for greater brand engagement throughout the supply chain by setting criteria and verification routines that create strict social policies toward suppliers, as well as factory audit structures and an open dialog within the IT industry.

Life Cycle Phase

A.7.1 Supply chain responsibility

Background

It is TCO Development's opinion that codes of conduct and factory audits are currently the tools that are most practical to help the majority of brands to work with socially responsible manufacturing in a structured way. It is also TCO Developments opinion that these tools are improving the situation incrementally as long as they are used in the correct and committed way by the brand.

The contribution of TCO Certified is:

- TCO Certified defines a minimum level of the Brand owner's code of conduct.
- TCO Certified is a control system to ensure that the brand takes the responsibility and works in a structured way in accordance with their code of conduct.
- TCO Certified creates an incentive for Brand owners to work proactively.

Definitions

Brand owner: The company or organization owning or controlling the brand name.
First tier manufacturing facility: Manufacturing plant where the final assembly of the TCO Certified product is taking place.
Corrective action plan: A list of actions and an associated timetable detailing the remedial process to address a specific problem

Applicability

The Brand owner.

Clarification

B.7.1

References

68 and 69

Mandate A.7.1:

By signing this mandate the Brand owner agrees to the (1. Commitment) and agrees to conduct the (2. Structured work). Additionally TCO Development requires that the Brand owner show (3. Proof) of the commitment and the structured work by allowing random inspections, by sharing audit reports and corrective action plans and by providing other documented proof described below.

1. Commitment:
The *Brand owner* shall have a code of conduct that is considered consistent with the following in the manufacturing of TCO Certified products:

- **ILO eight core conventions: 29, 87*, 98*, 100, 105, 111, 138 and 182.**
- **UN Convention on the Rights of the Child, Article 32.**
- **Relevant local and national Health & Safety and Labour laws effective in the country of manufacture.**

***In situations with legal restrictions on the right to freedom of association and collective bargaining, non-management workers must be permitted to freely elect their own worker representative(s) (ILO Convention 135 and Recommendation 143).**

2. Structured work:

- **The Brand owner shall ensure that routines are in place to implement and monitor their code of conduct in the manufacturing of TCO Certified products.**
- **In the final assembly factories the Brand owner shall ensure the implementation of their code of conduct through factory audits.**
- **In the final assembly factories and in the rest of the supply chain the Brand owner shall ensure that a corrective action plan is developed and fulfilled within reasonable time for all violations against their code of conduct that the Brand owner is made aware of.**

3. Proof:

- **TCO Development may conduct/commission random factory inspections (spot-checks) at any final assembly factory manufacturing TCO Certified products for the Brand owner and may require full audit reports during the certification period in order to assess social commitment and advancement.**
- **TCO Development may also require seeing corrective action plans and auditing reports from factories further down the supply chain to ensure that corrective actions have been successfully implemented.**
- **TCO Development additionally requires the documentation below to be verified by a third party approved verifier.**

Submit the following to an approved verifier:

The Brand owner shall submit all of the following as proof of their commitment and structured work:

1. **The Brand owner shall submit their code of conduct, which must be considered consistent with the criteria under 1. Commitment.**
2. **The Brand owner shall annually submit proof that management and workers at all final assembly factories manufacturing TCO Certified products have been informed about the Brand owner's code of conduct.**
3. **The Brand owner shall annually submit a list of all final assembly factories manufacturing TCO Certified products. This list shall include the dates of the most recent social audits covering the Brand owner's code of conduct and the dates of planned audits for each factory. The list shall show that all factories have or will be audited at least once over a 3-year period.**
4. **The Brand owner shall annually submit for review one third party audit report from one final assembly factory manufacturing TCO Certified products to demonstrate that the audits are conducted in a serious manner. The audit report shall at least cover the criteria in A.7.1 of TCO Certified and be of equal quality as an EICC audit. It shall not be more than 12 months old.**
5. **The Brand owner shall submit a corrective action plan for all nonconformities against A.7.1 of TCO Certified found in the submitted third party factory audit.**

If this is the first time the *Brand owner* certifies products to this generation of the criteria and time is needed to develop the proof above then the Brand owner can seek a 12 months grace period on the first application. TCO Development reserves the right to deny grace period if the Brand owner is considered a high risk for not meeting the 12 month due date. When seeking grace period an agreement must be completed/signed by the senior management representative at the *Brand owner* company.

The following information shall be submitted to an approved verifier:

- **A written guarantee that the mandate above is fulfilled. The guarantee shall be signed by the responsible person at the *brand owner* company.**

Submit the following together with the application to TCO Development:

- **A copy of a verification report from a verifier approved by TCO Development.**

We hereby guarantee our commitment to fulfilling the mandate.

……	……
Product brand name	Model name(s) or "All products"
……	……
Signature	Name and title in block capitals
……	……
Date (Declaration valid 1 year from date)	Brand Owner Company

A.7.2 Senior Management Representative

Background

It is beneficial to all parties that an open and transparent dialogue between TCO Development and the Brand owner exists for the monitoring of compliance with the criteria or when issues concerning working conditions at manufacturing facilities require clarification. A contact person responsible for the organization's efforts to enforce the socially responsible manufacturing criteria needs to be consistently available for dialogue with TCO Development throughout the validity of the certificate.

Applicability

The Brand owner.

Clarification

B.7.2

Mandate A.7.2:

The Brand owner shall have an appointed Senior Management Representative (SMR) who, irrespective of other responsibilities, has the authority to ensure that the social criteria in the manufacturing of TCO Certified products are met and who reports directly to top management.

- **The contact details of the SMR shall be submitted and the SMR shall be available for dialogue in English with TCO Development throughout the validity of all the Brand owners' certificates.**
- **To ensure that the SMR has the necessary authority and is working in a structured and proactive way implementing the code of conduct, a review of the SMR shall be done every year according to B.7.2.2.**

Submit the following to an approved verifier:

1. **Name, Title, Telephone Number and Email Address of the SMR.**
2. **A written guarantee that the above mandate is fulfilled. The guarantee shall be signed by the SMR at the Brand owner company.**

Submit the following together with the application to TCO Development:

A copy of a verification report from a verifier approved by TCO Development.

Complete the table using block lettering

Name	
Business title	
Telephone	
E-mail	

We hereby guarantee that the above mandate is fulfilled.

……	……
Product brand name	Model name(s) or "All products"
.....	.....
Signature	Name and title in block capitals
.....	.....
Date (Declaration valid 1 year from date)	Brand Owner Company

A.7.3 Conflict minerals

Background

The exploitation and trade of the natural resources Tantalum, Tin, Tungsten and Gold (3T+G) from conflict-affected areas is commonly regarded as a major source of conflict financing. TCO Development supports the underlying goal of the EU conflict minerals measures and those contained in the Dodd Frank Act 1502, but believe it is also vital to support in-region responsible sourcing programs in order to help suppliers meet these due diligence requirements, maintain trade and develop mining that directly benefits the people whose livelihoods depend on a legitimate trade. TCO Development now requires all Brand owners who use TCO Certified to address the issue of conflict minerals in their certified products in a progressive and proactive way.

Definitions

Conflict minerals: Tantalum, Tin, Tungsten and Gold = 3T+G
DRC: Democratic Republic of the Congo

Applicability

The Brand owner.

Clarification

B.7.3

Reference

86

Mandate A.7.3:

The Brand owner shall have a public conflict minerals policy and also indicate all the initiatives they are using/funding. It is TCO Developments opinion that the OECD Due Diligence Guidance for Responsible Supply Cain of Conflict-Affected or High-risk Areas is the most ambitious approach in the list.

At least one of the following options shall be marked:

- ☐ **A Due Diligence process based on the OECD Due Diligence Guidance for Responsible Supply Chains of Minerals from Conflict-Affected or High-risk Areas**
- ☐ **iTSCi (International Tin Research Institute (ITRI) Tin Supply Chain Initiative).**
- ☐ **CFTI (Conflict-free Tin Initiative).**
- ☐ **PPA (The Public-Private Alliance for Responsible Minerals Trade).**
- ☐ **Other relevant DRC in-region initiative:……**
- ☐ **CFSI (EICC/GeSi Conflict-Free Sourcing Initiative).**

Submit the following to an approved verifier:

1. **The completed TCO Certified Conflict Minerals Questionnaire and supporting documents**
2. **A written guarantee that the above mandate is fulfilled. The guarantee shall be signed by the responsible person at the Brand owner company**

Submit the following together with the application to TCO Development:

A copy of a verification report from a verifier approved by TCO Development.

We hereby guarantee that the above mandate is fulfilled.

……	……
Product brand name	Model name(s) or "All products"
.....	.....
Signature	Name and title in block capitals
.....	.....
Date (Declaration valid 1 year from date)	Brand Owner Company

R References

International standard organisations referred to in the reference list below and their Web sites.

- ASTM, American Society for Testing and Materials, http://www.astm.org/
- CIE, Commission Internationale de l'Eclairage, International Commission on Illumination, www.cie.co.at/cie/
- DIN, Deutsches Institut für Normung e. V., www2.din.de
- EBU, European Broadcasting Union, http://www.ebu.ch/tech_info.html
- IEC, International Electrotechnical Commission, www.iec.ch
- ISO, International Organization for Standardization, http://www.iso.org/
- ITU, International Telcommunication Union www.itu.int/home/index.html
- SMTPE, Society of Motion Picture Television Engineers, www.smtpe.org
- VESA, Video Electronics Standards Association, www.vesa.org

1. CIE Publication 69 (1987), Methods of characterizing illuminance meters and luminance meters: performance characteristics and specifications.
2. Flat Panel Display Measurements Standard, (M), Version 2.0, VESA - Video Electronics Standards Association Display Metrology Committee. June 1, 2001, CA 95035, Milpitas.
3. http://www.w3.org/Graphics/Color/sRGB.html
4. SMPTE RP 145-1994: SMPTE C Colour Monitor Colourimetry
5. ASTM gloss standard D523.
6. ISO2813:1994.
7. DIN 67 530.
8. CIE Publication 15.2 (1986), Colourimetry, p. 11, p.27-28 and p. 53-54, table 1.3).
9. IEC 61966-2-1 (1999-10) Multimedia systems and equipment - Colour measurement and management - Part 2-1: Colour management - Default RGB colour space – sRGB.
10. ITU-R Recommendation BT.470-6: Conventional television systems.
11. ITU-R Recommendation BT.709-5: Parameter values for the HDTV standards for production and international programme exchange
12. E.B.U. Standard for chromaticity tolerances for studio monitors Tech. 3213-E August 1975.
13. SMPTE 170M-1999 Television - Composite Analogue Video Signal - NTSC for Studio Applications.
14. Hunt, R.W.G. Measuring colour. 3rd edition (1998), Kingsley-Upon-Thames: Fountain Press.
15. ISO TC130 WD 12646 p. 5 Section 4.7 Chromaticity and luminance of the white and black points and tracking.
16. ISO 3664:1999, Viewing conditions for graphic technology and photography, p. 9 Uniformity of screen luminance.

17. ISO 3664:1999, Viewing conditions for graphic technology and photography, p. 5, 4.2.4 Surround and backing for reflection viewing, Note 1 p. 8.
18. ISO 3664:1999. Viewing conditions for graphic technology and photography, p. 10 Monitor luminance.
19. ISO 9241-4 1998 Ergonomic requirement for work with visual display terminals (VDTs) – Part 4: Keyboard requirements.(ISO 9241-4:1998/Cor 1:2000)
20. Barten, P.G.J., (1999) Contrast sensitivity of the human eye and its effects on image quality, SPIE Optical Engineering Press
21. Barten, P.G.J., (1999) Contrast sensitivity of the human eye and its effects on image quality, SPIE Optical Engineering Press p. 105 - 106.
22. Barten, P.G.J., (1999) Contrast sensitivity of the human eye and its effects on image quality, SPIE Optical Engineering Press p. 179.
23. Barten, P.G.J., (1999) Contrast sensitivity of the human eye and its effects on image quality, SPIE Optical Engineering Press p. 179 - 181.
24. Kokoschka S. (1986). Visibility aspects of VDUs in terms of contrast and luminance. Behaviour and information technology. vol.5, No. 4, pp 309-333.
25. Schenkman, B., and Kjelldahl, L. (1999). Preferred colour temperature on a colour screen. Displays, 20, 73 - 81.
26. Roberts, A., Eng, B., (1995) "A method for the calculation of tolerances for display primary chromaticity coordinates" Research and development Department, Technical Resources, The British Broadcasting Corporation.
27. www.srgb.com
28. Wyszecki, G., Stiles, W.S., (1982) Colour Science: Concepts and methods, quantitative data and formula, Second Edition, John Wiley & Sons, Inc. Chapter 7, Visual thresholds, pp 567-569.
29. Wyszecki, G., Stiles, W.S., (1982) Colour Science: Concepts and methods, quantitative data and formula, Second Edition, John Wiley & Sons, Inc. Chapter 7, Visual thresholds, pp 574-575.
30. Le Grand, Y. (1957). Light, colour and vision. Chapman and Hall, pp 278-279.
31. Le Grand, Y. (1957). Light, colour and vision. Chapman and Hall.
32. Le Grand, Y. (1957). Light, colour and vision. Chapman and Hall, p. 119
33. Le Grand, Y. (1957). Light, colour and vision. Chapman and Hall, Chapter 11, Luminance difference thresholds, p. 261.
34. Le Grand, Y. (1957). Light, colour and vision. Chapman and Hall, Chapter 11, Luminance difference thresholds.
35. Le Grand, Y. (1957). Light, colour and vision. Chapman and Hall, Chapter 12, Colour difference thresholds p. 279.
36. Fairchild M. D. (1995), "Considering the surround in device-independent colour imaging". www.cis.rit.edu/people/faculty/fairchild/PDFs/Bart.pdf
37. A Comparison of the Postures Assumed When Using Laptop Computers.
38. AFS (The Swedish Work Environment Act) 1998:5: Work with Display Units
39. Contemporary Ergonomics 2001, Edited by M.A. Hanson. Taylor & Francis, London, 2001:
40. EC Directive 90/270/EEC
41. Ergonomics for the New Millennium. Proceedings of the XIVth Triennial Congress of the International Ergonomics Association and the 44th Annual Meeting of the Human Factors and Ergonomics Society, San Diego, California,

USA, July 29-August 4, 2000. Human Factors and Ergonomics Society, Santa Monica, California, USA, Volume 6, 2000:

42. Ergonomics for the New Millennium. Proceedings of the XIVth Triennial Congress of the International Ergonomics Association and 44th Annual Meeting of the Human Factors and Ergonomics Society, San Diego, California, USA, July 29-August 4, 2000. Human Factors and Ergonomics Society, Santa Monica, California, USA, Volume 1, 2000: Evaluation of the Ergonomic Aspects of Portable Personal Computers with Flat Panel Displays (PC-FPDs)
43. HANSSON, RISBERG ., et al, 2003, Working Conditions and Health Among Students with Intensive Laptop Use at a Senior High School. HCI 2003.
44. HARRIS, C & STRAKER, L, 2000, Survey of physical ergonomics issues associated with schoolchildren's' use of laptop computers. International Journal of Industrial Ergonomics. Vol 26, 3.
45. Health and Safety Executive, HSE Contract Research Report 304/2000, Health and Safety of Portable Display Screen Equipment.
46. HUMAN Scale 1a
47. Human-System Interaction: The Sky's No Limit. Proceedings of the Human Factors and Ergonomics Society 42nd Annual Meeting, Chicago, Illinois, October 5-9, 1998. The Human Factors and Ergonomics Society, Santa Monica, California, Volume 1,1998 : Laptop Configurations in Offices: Effects on Posture and Discomfort.
48. Industrial Health,1998 : Ergonomic Aspects of Portable Personal Computers with Flat Panel Displays (PC-FPDs): Evaluation of Posture, Muscle Activities, Discomfort and Performance.
49. International Journal of Industrial Ergonomics, 2002: Effects of the Liquid Crystal Display Tilt Angle of a Notebook Computer on Posture, Muscle Activities and Somatic Complaints
50. ISO 9541:5 Ergonomic requirements for office work with visual display terminals (VDTs) – Part 5:Workstation layout and postural requirements.
51. ISO 9241-4 1998 Ergonomic requirement for work with visual display terminals (VDTs) – Part 4: Keyboard requirements.
52. Journal of Occupational Health and Safety - Australia and New Zealand,1995,
53. SOMMERICH, C.M, et.al., 2002, Effects of notebook computer configuration and task on user biomechanics, productivity and comfort. International Journal of Industrial Ergonomics. Vol 30, 1
54. STRAKER, L.; JONES, K.J.; MILLER, J. Applied Ergonomics,1997, A Comparison of the Postures Assumed When Using Laptop Computers
55. UNISON, London, 1998, Health and Safety and the Use of Laptop Computers: Guidelines for UNISON Branches, Safety Representatives and Stewards.
56. ISO 7779:2010, Acoustics – Measurements of airborne noise emitted by computer and business equipment. This international standard is based on ECMA-74.
57. ISO 3741:2010, Acoustics – Determination of sound power levels of noise sources using sound pressure – Precision methods for reverberation rooms.
58. ISO 3744:2010, Acoustics – Determination of sound power levels of noise sources using sound pressure - Engineering method in an essentially free-field condition over a reflecting plane.

59. ISO 3745:2003, Acoustics – Determination of sound power levels of noise sources – Precision methods for anechoic and semi anechoic rooms.
60. ISO 11201:2010, Acoustics – Noise emitted by machinery and equipment – Measurement of emission sound pressure levels at a work station and other specified positions – Engineering method in an essentially free field over a reflecting plane.
61. ISO 9296:1998, Acoustics – Declared noise emission values of computer and business equipment.
62. Standard ECMA-74 8th edition, Measurement of Airborne Noise Emitted by Information Technology and Telecommunications Equipment.
63. EN 60950-1 (IEC 60950-1). Safety of information technology equipment including business equipment.
64. EMAS EU regulation no 761/2001 concerning the voluntary participation of industrial companies in the Union's environmental control and review structure.
65. ISO 14001 Environmental management systems - Specification with guidance for use
66. GovTrack.us. "H.R. 4040--110th Congress (2007): Consumer Product Safety Improvement Act of 2008, GovTrack.us (database of federal legislation) . Retrieved 14 August 2009.
67. CHA Website - Proposal for identification of Substances of Very High Concern
68. Electronic Industry Citizenship Coalition (EICC), http://www.eicc.info
69. SA8000, http://www.sa-intl.org
70. ENERGY STAR® Program Requirements for Computers
71. International Efficiency Marking Protocol for External Power Supplies
72. EU Directive 2006/66/EC on batteries and accumulators containing certain dangerous substances
73. EU Directive 2011/65/EU on the restriction of the use of certain hazardous substances in electrical and electronic equipment
74. Regulation concerning Registration, Evaluation, Authorisation and Restriction of Chemicals (REACH), EC 1907/2006
75. EU Directive 67/548/EEC on the approximation of laws, regulations and administrative provisions relating to the classification, packaging and labelling of dangerous substances
76. EU Directive EC 1272/2008 on classification, labelling and packaging of substances and mixtures
77. The EU Green Paper "Environmental questions concerning PVC" KOM (2000) 469
78. ISO 11469:2000 Plastics - Generic identification and marking of plastics products
79. ISO 1043-1, -2, -3, -4 Plastics - Symbols and abbreviated terms
80. EU Directive 2002/96/EC on waste electrical and electronic equipment (WEEE)
81. Directive 94/62/EC on packaging and packaging waste.
82. http://www.umweltbundesamt.at/fileadmin/site/umweltthemen/abfall/ROHS/finalresults/Annex6_RoHS_AnnexII_Dossier_DEHP.pdf [DEHP]
83. http://www.umweltbundesamt.at/fileadmin/site/umweltthemen/abfall/ROHS/finalresults/Annex7_RoHS_AnnexI I_Dossier_BBP.pdf [BBP];

84. http://www.umweltbundesamt.at/fileadmin/site/umweltthemen/abfall/ROHS/finalresults/Annex8_RoHS_AnnexI I_Dossier_DBP.pdf [DBP].
85. http://rohs.exemptions.oeko.info/fileadmin/user_upload/reports/20140520_DIBP_AnnexII_Dossier_final.pdf [DIBP].
86. http://www.oecd.org/corporate/mne/mining.htm

B Test Methods and clarifications

The following definitions, test conditions, requested specifications from clients, and other information apply to the test methods described in this document.

Test results are valid only for the presentation form(s) and configuration(s) tested.

B.0 General test conditions

B.0.1 Definition of a test object

- Test objects covered by this document are Notebook computers with visual displays with fixed positions of the pixels.
- A test object with all necessary information for its operation shall be delivered to the test facility in test ready condition including any required accessories. All necessary information about how to operate and adjust the test object shall be provided.
- The performance of the test object shall in all aspects be fully in accordance with the performance of the final product.
- The client shall inform the test facility if any image enhancement software or is used for the Notebook computer, since this can arbitrarily influence the results, causing test facilities to question the results.

B.0.2 Required test object information

The client shall specify:

- Name(s), type designation(s) and manufacturer for all different exchangeable parts of the test object.
- Display resolution of the Notebook computer display and the vertical and horizontal frequencies for testing.
- Name, type designation and manufacturer of the graphics card. This information shall be written in the test report.

B.0.3 Conditions for the equipment under test

- The Notebook computer being tested shall be physically prepared for testing and shall be warmed up for at least 30 min or until it is stabilised. The test engineer shall not need to wait for more than 1 hour for the display to be considered stable. In this instance the engineer may cancel the test and demand a replacement sample
- The Notebook computer screen surface shall be clean when tested.

- The Notebook computer shall be tested under nominal conditions of input voltage, current, etc. If sold on different markets, one setup shall be chosen by the manufacturer which shall represent the conditions of the country where it will be sold the most.
- The Notebook computer shall be tested with a fully charged battery and be plugged into mains during all tests, unless otherwise specified in the test methods.
- The Notebook computer shall be tested without load on any peripheral interface such as USB, firewire or network hub, memory card slot, loudspeakers or similar unless otherwise stated by the test procedure.

B.0.4 Notebook computer alignment for testing

The Notebook computer display front shall be aligned vertically with the possibility to rotate the display ±15° around a vertical axis through the centre-point of the display front. It shall also be possible to rotate the screen forwards and backwards ±15° around a horizontal axis through the same centre-point.

B.0.5 Instruments used for testing

All instruments used for testing of a Notebook computer shall be of good quality and validated by a recent test certificate from a certified test facility. Any necessary instrument calibration shall be done before the tests are performed. Calibrations shall be traceable to national standards.

B.0.6 Settings of the Notebook computer

- If present, the standard controls of the Notebook computer shall be used to configure and adjust the display, e.g. brightness, contrast, correlated colour temperature.
- The Notebook resolution shall be set to the native resolution and be used for all test parameters.
- The measurement shall be taken with the Notebook computer in default CCT. If no default CCT is given or available the colour temperature presented by the recall function (or equivalent function) in the OSD (On Screen Display). If no OSD exists the default CCT on start-up shall be used
- All measurements shall be taken with no adjustments made between the measurements, if not otherwise specified in the test methods.
- An external control unit that is not a standard part of the Notebook computer is not allowed.
- The colour depth (6 or 8 bits per colour channel) of the testing program shall be at least as high as for the sample tested.
- In Windows/Display Properties/Settings/Advanced the Windows “Small fonts” option shall be used.
- In Windows/Display Properties/Appearance the “Windows standard” colour scheme option shall be used.

- All settings in the operating system shall be the default ones as delivered to the end user or the default as it appears directly after the installation of the operating system.
- Integrated automatic sensors and any eco-mode functions enabled by default on the display shall be disabled by the test engineer for all the tests, as long as by doing so the default CCT setting does not change.

B.0.7 Test image/test character

- All test images can be found on the home page of TCO Development, www.tcodevelopment.com.
- The default testing 12 point Arial font and 100% "zoom/magnification" shall be used. The latest version of MS Windows operating system is the default user interface, if not otherwise stated. For Macintosh computers, Mac OS can be used during testing. The operating system most likely to be used by an end user should be used for testing.
- The default testing polarity is positive polarity (black characters on a white background).
- Another possibility is to use a testing program that shall consist of software commonly used in office and home computer work. The word processor should be able to produce the text and graphics required for the test procedures.
- All parts of the tests for a test object shall be conducted using the same font, character size, correlated colour temperature, resolution, operating system and other settings of the Notebook computer controls etc., unless otherwise stated in the test procedure.

B.0.8 Test Image and Test Luminance setting

The test image in Figure B.0.8.1, referred to as the TCO **Certified** default test image, has an 80 % image loading. The test image shall fill the whole usable screen that represents the "full screen mode". This image shall be used for testing unless otherwise specified in the test procedure.

If the measured display is not affected by image loading it is permitted to use alternative images (described in *procedure* below) rather than the default test image for measurement of RGB settings (A.2.5.3). The benefit is to minimize the contribution of stray-light for some measurement equipment. In the event that this method is chosen, pay extra attention to displays with dynamic backlight as they may be affected by the different image loading.

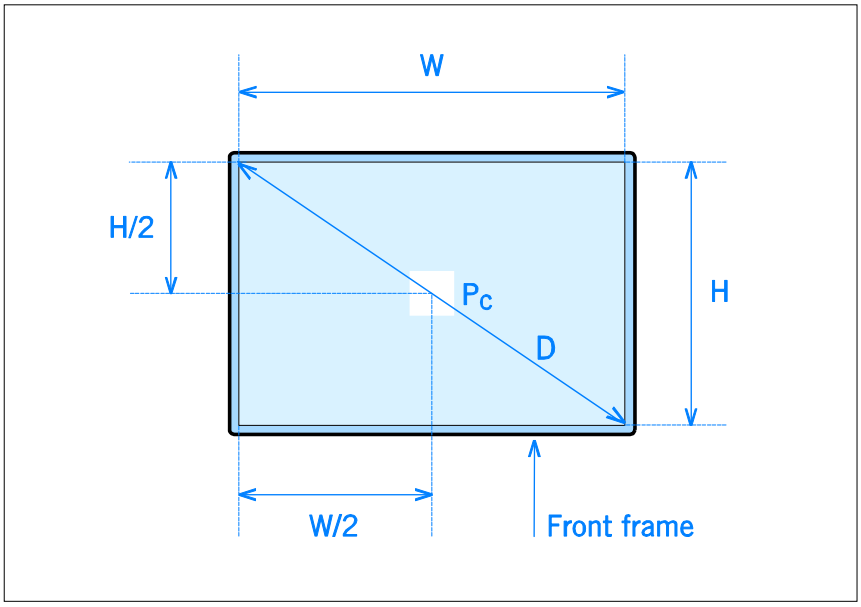

Figure B.0.8.1. The TCO Certified default test image.

Procedure:

- The background colour shall be set to RGB 204, 204, 204 (i.e. equal to 80 % image loading).
- An active white square at the centre of the display shall be 4° × 4° in size and have an RGB setting of 255, 255, 255. The 4° × 4° corresponds to an area of about 34.9 mm x 34.9 mm at a measuring distance of 500 mm or 69.8 mm x 69.8 mm at 1 meter. For a 15" display measured at 57 cm, the 4° × 4° corresponds to a square of 40 mm × 40 mm.
- A permitted alternative to the 4°×4º test square when testing RGB settings is to increase the test square to a size that is equal to 80% of the full screen mode area. The background shall continue to be RGB 204, 204, 204.

Test Luminance setting:

- The luminance of the Notebook computer shall be adjusted to ≥125 cd/m^2. Test luminance shall be as close to, but never lower than 125 cd/m^2. To achieve an acceptable image quality proceed as follows:
  Use the TCO **Certified** default test image with an 18-step grey scale pattern (see Figure B.2.2.1) presented on the display at the default CCT setting. The controls of brightness and contrast, if available, shall be adjusted to get the best visual performance of the pattern at the test luminance level. The contrast shall be left at the default setting. The brightness control shall be adjusted to set the display luminance at ≥125 cd/m^2. If the possibility of backlight adjustment exists, it shall not be used unless specified by the manufacturer. The aim is to get the 18-step grey scale pattern optimised so that at least 15/18 greyscales are visible at the test luminance level. If greyscale quality is not acceptable it may be improved by changing the contrast setting if available. The evaluation of attaining at least 15 of the steps in the 18-step greyscale shall be carried out orthogonally to the screen surface

B.0.9 Test report

The test results are valid only for the presentation form(s) and configuration(s) tested. If other configurations are accepted by the test facility based on the results of the tested ones it shall be clearly specified in the test report that these configurations have not been tested.

The test report shall include the following information:

- Any changes to the test methods.
- The manufacturer, brand name, model type and serial number (if available).
- The panel brand, full panel number and if the display is a pivot type
- The mode(s) (i.e. horizontal and vertical scan frequency and resolution) used during the test and the aspect ratio.
- The supply voltage and frequency used during the test and whether it is a CLASS I or CLASS III type. If CLASS III the external power supply brand and model number shall also be stated.
- The degree of uncertainty for each given measurement result.
- If present, the setting of contrast, brightness and CCT preset used during the test.
- Photographs of the product showing: Front, rear, open panel, a legible panel marking label and the external power supply with legible marking label.

B.1 General information

B.1.1 Information to end users

The TCO Certified Document shall accompany the product as provided by TCO Development. No editorial changes without TCO Development's consent are accepted. The Document is available at www.tcodevelopment.com.

If the product that is to be TCO Certified is branded differently from the applicant name, the applicant company signing the guarantee shall be sure that the brand owner agrees with the requirement.

Compliance is through one of the following options:

1. Separate printed document
   The TCO Certified Document is placed in the packaging and accompanies the product to the end user

2. In the user manual or a digital file
   The TCO Certified Document is placed in the user manual or a digital file and accompanies the product to the end user. The TCO Certified Document shall be printed under a headline for TCO Certified. This headline shall be visible in the table of contents of the user manual or digital file.
   The TCO Document must be separated from other text portions of the user manual or digital file so that it is obvious that the TCO Document is not accountable for the content of any other texts.

3. On the brand owner web site.
   A direct link to the TCO Certified Document on the brand owner's web page is placed in the user manual or digital file and accompanies the product to the end user. There shall be a headline for TCO Certified in the user manual or digital file. This headline shall be visible in the table of contents. With this headline there shall be a direct link to the TCO Certified document on the brand owner's website. Also accepted are TCO logos or icons that redirect the visitor by a link to the TCO Certified Document

Back to A.1.1

B.2 Visual ergonomics

B.2.0 General test conditions for visual ergonomics

B.2.0.1 Basic test requirements

As described in section B.0.
For all tests, the Notebook computer screen shall be clean.

B.2.0.2 Photometric test facility general requirements

Photometric measurements shall be performed under darkroom conditions. This means that measurement data shall in no way be affected by direct light from sources or light reflected from interiors, equipment, clothes etc.

The test facility shall have a routine for the control of the stray-light level at the Notebook computer screen (see also B.2.0.6).

B.2.0.3 Power supply and test room climate requirements for testing

- AC mains voltage* — 230 VAC RMS, tolerance ≤ 1 %
- AC mains frequency* — 50 Hz, tolerance ≤ 2 %
- Test room temperature — 23±3 ºC
- Humidity — 20-75 % RH (non-condensing)

_____
* – or other voltage and frequency combination specified by the client.

B.2.0.4 Photometric and spectrometric measurements

Several instruments are to be used when carrying out measurements for visual ergonomics. All instruments shall be recently calibrated and carry a calibration certificate from a certified test facility.

The following instrument types are to be used for testing:

- **Gloss meter**. An instrument for measuring gloss as a function of the directionally selective reflecting properties of a material at angles near to and including the direction giving specular reflection.

- **Luminance meter**. A luminance meter shall have a sufficiently good V(λ)-sensitivity (Requirements for luminance meters are covered by CIE Publication 69 (1987). Luminance meters of CIE Class L(aboratory) with a combined performance characteristic ≤ 3 % shall be used.) and integrate luminance over a finite measuring field during a finite time. The meter shall be equipped with adjustable optics and always be focused on the measured area. The luminance meter must incorporate a sufficiently long time constant of integration in order to ensure averaging of the pulsation of the light emitted by Notebook computers. The sensitivity shall be independent of the polarization of the measured light (often referred to as f_8 error).

  The luminance meter measuring field shall be one degree for all measurements, except for the micro-photometric luminance measurements, see below.

  An automated instrument using collimating optics may be used for testing although the measurement area will differ somewhat from the area covered by the luminance meter. When the luminance measurement in this case is done at a shorter distance than 1.5 × the display diagonal (D) because of instrumental constraints, the test facility shall verify that the results are equal to those done at 1.5 × D or (400mm if 1.5 × D < 400mm).

- **Micro-photometer**. Micro-photometric registration of the luminance distribution of test patterns shall be performed with an array photo detector device capable of resolving structures of 0.02 mm. A scanning device shall not be used because it is sensitive to jitter and other variations that may occur during a scanning.

- **Spectro-radiometer**. An instrument for the measurement of radiant flux as a function of wavelength shall be used. A spectro-radiometer for the measurement of light and colour is normally equipped with a microprocessor that makes it possible to obtain luminance and colour co-ordinates directly from raw measurement data. A spectro-radiometer can replace the luminance meter when suitable. The wavelength resolution shall be ≤ 4nm for attaining accurate colour measurements. The sensitivity shall be independent of the polarization of the measured light (often referred to as f_8 error).

B.2.0.5 Measurement distance

All measurements shall be carried out through a point, simulating the eye position of the operator, at a distance of 1.5 × “diagonal of the screen” from the centre-point of the Notebook screen but no less than 400 mm which could be considered as an absolute minimum viewing distance for comfortable viewing. The instrument shall be focused on the presented test image for all measurements.

B.2.0.6 Stray light

Stray light may cause errors which can negatively affect measurement of luminance, contrast and chromaticity coordinates. It is therefore necessary to make an evaluation of stray light influence for the different measurement procedures described in this document.

If it is verified that stray light affects the measurement result it is necessary to take actions to eliminate the source of error. Two possible ways to solve the problem are to equip the luminance meter with a well-designed screening attachment, a frustum or to use a black screening sheet at the Notebook screen surface.

B.2.0.7 Overall uncertainty

The overall uncertainty of the test facility shall be calculated for each measurement procedure in this document and presented in the test report. The uncertainty shall be within the required levels for each criterion. All measurement uncertainties claimed for used instruments shall be referred to traceable calibration reports.

About combining overall uncertainty values during test measurements:

- Criteria are fulfilled without adding or subtracting the overall measurement uncertainty.
- Report the value shown on the instrument without adding or subtracting the overall measurement uncertainty.
- The overall measurement uncertainty of the test facility shall be printed in the test report together with the reported value.
- For a test facility that has an overall measurement uncertainty higher than the one allowed by TCO Development for a certain criteria, then the test report for that criteria is not valid for TCO certification and the test result will not be accepted by TCO Development.

B.2.1 Image detail characteristics

B.2.1.1 Native display resolution requirements

B.2.1.1.1 Preparation of the Notebook computer for testing

No specific preparation of the Notebook computer is needed.

B.2.1.1.2 Equipment

Calculator and product manual or similar information about the display resolution.

B.2.1.1.3 Test method

The maximum resolution and frequencies of the display are found in the manual or similar information from the manufacturer.

B.2.1.1.4 Test evaluation

The viewing distance is defined as 1.5× the display diagonal, but no less than 400 mm which could be considered as an absolute minimum viewing distance for comfortable viewing. This means that the mandate is independent of the display size and viewing distance but dependent on the display format. Only the display format needs to be known.

The minimum resolution to fulfil the criteria can be calculated for any display format in the following way:

Minimum amount of pixels in the vertical direction
Half the display height at the viewing distance expressed in degrees is:

- *arctan(width/2/viewing distance)*

The whole display height expressed in degrees is:

- *2 × arctan(width/2/viewing distance)*

The requirement is 30 pixels/degree which gives the amount of pixels needed in the vertical direction to:

- *30 × 2 × arctan(width/2/viewing distance)*

Example:
For the format 5:4:3 and viewing distance 1.5 this gives the formula:

- *30 × 2 × arctan(4/2/(1.5 × 5)) = 896 pixels*

The principle is the same in the horizontal direction.

For the most common display formats the mandates are:

Display format	Min amount of horizontal pixels	Min amount of vertical pixels
5:**4:3**	**896**	**679**
18.36:**16:9**	**972**	**557**
6.4:**5:4**	**875**	**706**
18.87:**16:10**	**947**	**601**

Note: Display format is a ratio between [Diagonal **: Width : Height]**

For or other aspect ratios the min display resolution shall be calculated.

B.2.1.1.5 Overall uncertainty

Uncertainty is not applicable in this case. Product data information is sufficient.

Back to A.2.1

B.2.2 Luminance characteristics

B.2.2.1 Luminance level

B.2.2.1.1 Preparation of the Notebook computer for testing

- All necessary preparations described in B.0 and B.2.0 shall be done.
- The TCO Certified default test image with an 18-step greyscale as shown in Figure B.2.2.1 shall be used for luminance level measurement.

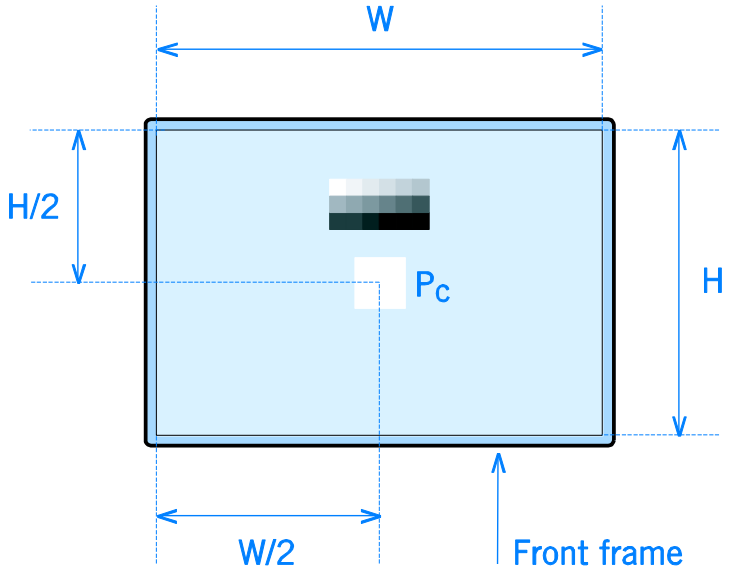

Figure B.2.2.1. TCO Certified default test image with the 18-step greyscale inserted

- The measurement position Pc shall be at the centre of a 4° x 4° square without line borders, having an RGB setting of 255, 255, 255, and positioned at the centre of the screen. The background shall be RGB 204, 204, 204.

The following evaluation shall be carried out orthogonally to the screen surface

- To achieve the maximum luminance proceed as follows:
  Use the TCO Certified default test image with an 18-step grey scale pattern presented on the screen. From the default setting, adjust the controls for the display to achieve as high luminance as possible with an acceptable image quality. The image quality is considered acceptable when at least 15 of the 18 greyscale steps are visible. At this maximum luminance, test that the display has a luminance ≥ 150 cd/m^2.
- When this test is completed the display shall be adjusted back to the test luminance setting as describe under B.0.8 for all remaining Visual Ergonomic tests. Allow the display to stabilize before other test measurements are made.

B.2.2.1.2 Equipment

Luminance meter.

B.2.2.1.3 Test method

The luminance at the centre of the white test area shall be measured with the luminance meter directed orthogonally to the test area as described in B.2.0.5.
For the battery mode measurement, the battery shall be fully charged. Disconnect the power supply and wait about 5 minutes to have the screen stabilized before the measurement of the luminance is performed. Re-connect the power supply after the Battery mode test is completed.

B.2.2.1.4 Test evaluation

The measured luminance is the required value. The luminance shall be reported with no decimal places.

The measured Luminance, Contrast and Brightness settings shall be noted in the test report. The preset CCT in default setting shall also be noted.

B.2.2.1.5 Overall uncertainty

≤ ± 10 % in luminance.
See B.2.0.7.

Back to A.2.2.1

B.2.2.2 Luminance uniformity

B.2.2.2.1 Preparation of the Notebook computer for testing

- All necessary preparations described in B.0 and B.2.0 shall be done.
- The entire active area of the screen shall be white and the Notebook computer colour setting shall be RGB 255, 255, 255.

B.2.2.2.2 Equipment:

Luminance meter.

B.2.2.2.3 Test method:

The luminance shall be measured orthogonally to the Notebook screen plane at 9 points. The 4 corner positions (1, 3, 7 and 9) are measured 1º from the edges of the screen as shown in Figure B.2.2.2.1. The 4 side positions (2, 4, 6 and 8) are measured on the middle of the side 1º from the edge. The centre position (5) shall also be measured. This means that all measurement points have 1/2º marginal to the edges if the measurement area of the instrument is 1º.

The luminance uniformity shall also be evaluated visually by the technician in order to find any dark or bright areas except from the 9 default positions. If a significantly bright or dark area is found these measuring points shall also be measured and used to evaluate the luminance uniformity.

The conditions for luminance measurement in the corner positions and the distribution of other measurement points are illustrated in figure B.2.2.2.1

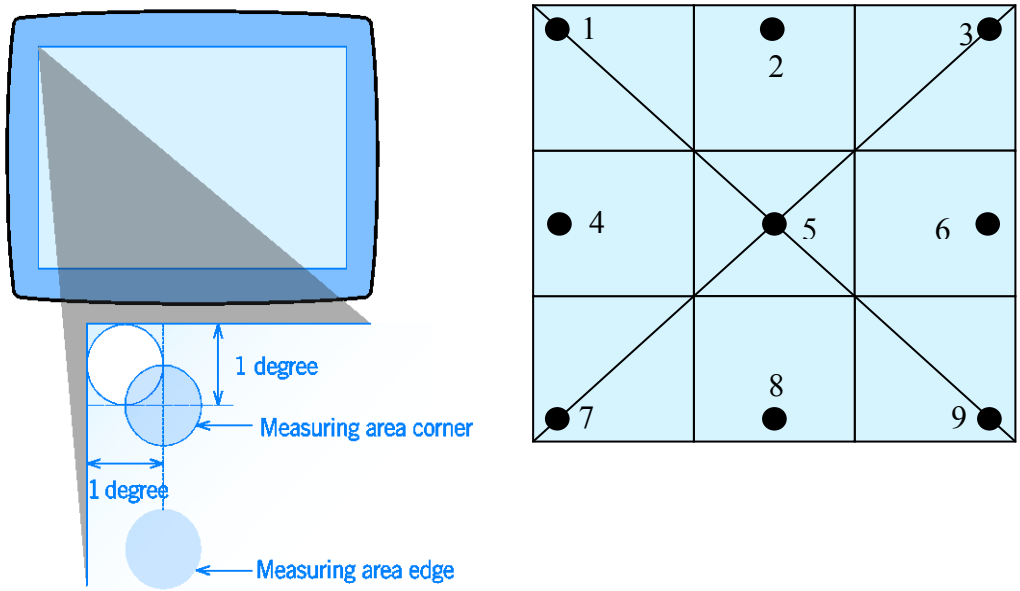

Figure B.2.2.2.1. Measurement positions for the measurement of luminance and colour uniformity.

B.2.2.2.4 Test evaluation

The luminance uniformity shall be reported as the ratio between the highest and the lowest measured luminance values.

The result shall be presented to 2 decimal places.

B.2.2.2.5 Overall uncertainty

≤ ± 10 % in luminance.

≤ ± 0.1 unit in luminance uniformity.

See B.2.0.7.

Back to A.2.2.2

B.2.2.3 Luminance uniformity – angular dependence

B.2.2.3.1 Preparation of the Notebook computer for testing

- All necessary preparations described in B.0 and B.2.0 shall be done.
- Luminance values shall be measured at five different positions on the screen as shown in Figure B.2.2.3.1. Each measurement position shall consist of white RGB 255, 255, 255 squares sized 4° × 4° without line borders.
- The background shall be RGB 204, 204, 204.
- The luminance meter shall be positioned and directed orthogonally to the screen centre-point as described in B.2.0.5.

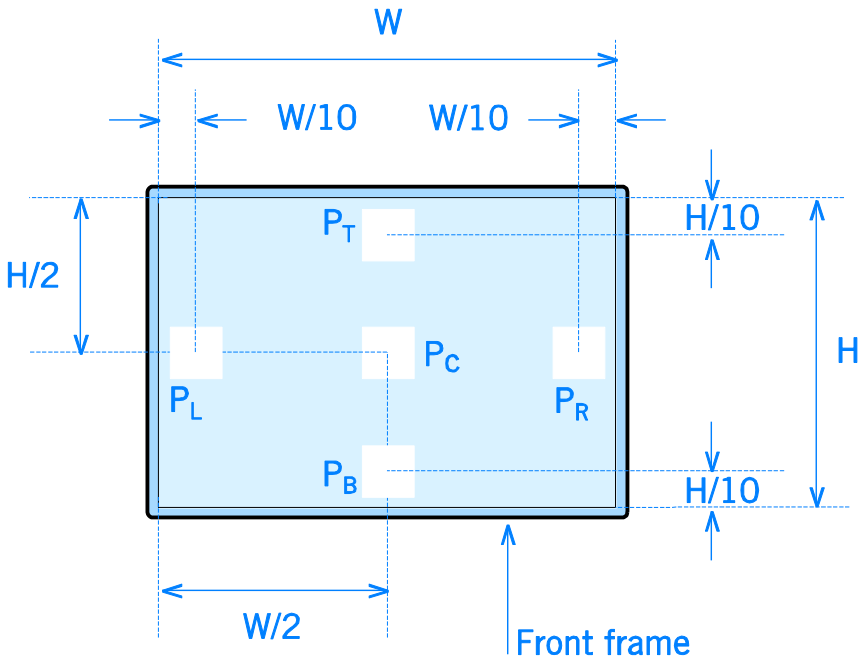

Figure B.2.2.3.1. Measurement positions for angular dependent luminance uniformity.

B.2.2.3.2 Equipment

Luminance meter.

B.2.2.3.3 Test method

1. The luminance meter shall always be directed towards a measurement point and rotated around a fixed vertical axis (or horizontal axis for the tilt measurements) through the focal point of its front lens at the distance described in B.2.0.5.
2. In landscape mode the display shall be rotated +15 degrees around a vertical axis through the display centre-point and the luminance at positions P_L and P_R, ($L_{PL/+15/0}$ and $L_{PR/+15/0}$ respectively) shall be recorded. See Figure B.2.2.3.2.
3. In landscape mode the display shall then be rotated -15 degrees around the vertical axis through the screen centre-point and the luminance at positions P_L and P_R ($L_{PL/-15/0}$ and $L_{PR/-15/0}$ respectively) shall be recorded. See Figure B.2.2.3.2.

4. In landscape mode the display shall then be tilted +15 degrees backwards around a horizontal axis through the display centre-point and the luminance at positions P_T and P_B ($L_{PT/0/+15}$ and $L_{PB/0/+15}$ respectively) shall be measured. This is not mandated but the result shall be recorded for reference reading in the test report. See Figure B.2.2.3.3.
5. In landscape mode the display shall then be tilted -15 degrees around a horizontal axis through the display centre-point and the luminance at positions P_T and P_B ($L_{PT/0/-15}$ and $L_{PB/0/-15}$ respectively) shall be measured. This is not mandated but the result shall be recorded for reference reading in the test report. See Figure B.2.2.3.3.
6. The measurements to be carried out are summarised in Table B.2.2.3.1. The step numbers in the step column are the test method paragraphs

Table B.2.2.3.1.

Steps	Landscape mode	**Screen rotation**	**Screen tilt**	**Measuring points**			
				P_L	P_R	P_T	P_B
Step 2	Horizontal direction (turned around vertical axis)	+15°	0°	X	X		
Step 3	Horizontal direction (turned around vertical axis)	-15°	0°	X	X		
Step 4	Backwards tilt = (turned around the horizontal axis)	0°	+15°			X	X
Step 5	Forwards tilt = (turned around the horizontal axis)	0°	-15°			X	X

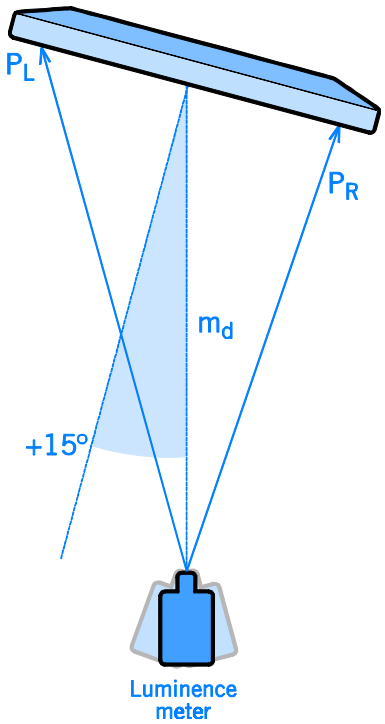

Figure B.2.2.3.2. Top view of test set-up when the display is rotated ±15 degrees. The + rotation is defined clockwise.

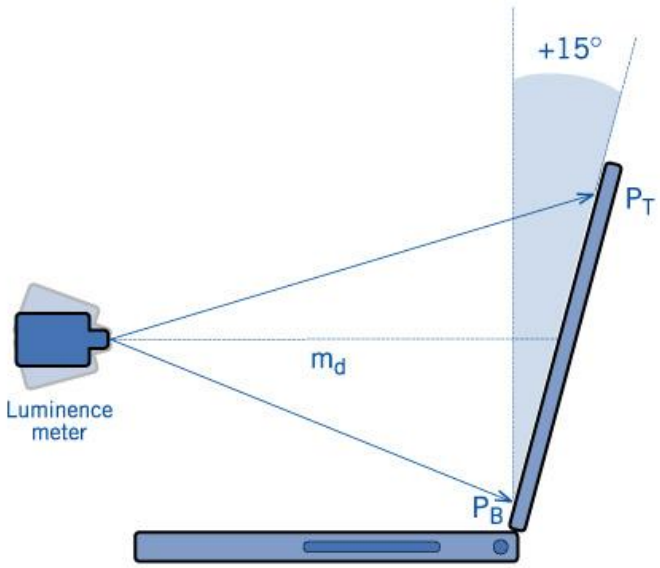

Figure B.2.2.3.3. Side view of the test set-up when the display is tilted +15° backwards.

B.2.2.3.4 Test evaluation

The luminance uniformity for angular dependence shall be calculated as follows: In landscape mode, for the horizontal direction, (turned around the vertical axis) measurement presented in Table B.2.2.3.1 (test step 2 and 3). A ratio between the measured luminances shall be calculated. This ratio, or its inverse if it has a higher value, shall be reported as the requested L_{max} to L_{min} luminance uniformity in **mandate 1.** The requirement is on the mean value of the two ratios +15° and -15°. The result shall be presented to 2 decimal places.

Tilt test results are required to be given in the report:
In landscape mode, for the vertical direction (turned around the horizontal axis). Tilt backwards and tilt forwards ±15° (test steps 4 and 5 above). A ratio between the two measured luminances shall be calculated. Both the +15° and -15° ratios shall be declared in the test report as the requested L_{max} to L_{min} luminance uniformity and be presented to 2 decimal points.

B.2.2.3.5 Overall uncertainty

≤ ± 10 % in luminance.

≤ ± 0.3° in rotation angle.

≤ ± 0.1 unit in luminance uniformity. See B.2.0.7.

Back to A.2.2.3

B.2.3 Luminance contrast characteristics

B.2.3.1 Luminance contrast – characters

B.2.3.1.1 Preparation of the Notebook computer for testing

- All necessary preparations described in B.0 and B.2.0 shall be done.
- A micro-photometer for luminance measurement shall be aligned orthogonally to the Notebook computer display.
- The test image shall be filled with rows of the regular capital letter “H” in 12 point Arial font.

B.2.3.1.2 Equipment

A micro-luminance meter such as an array photo detector capable of measuring luminance on structures ≤ 0.02 mm. Measurement requirements are given in clause B.2.0.2.

B.2.3.1.3 Test method

- By visual evaluation of the standard test measurement position the technician shall search for and locate visual stripes, or patches, that clearly influence the contrast of characters or even parts of characters. Once the patches are visually identified as having significantly lower contrast they shall be geometrically referenced from the upper left corner of the active image and measured, see below. If one position is found that does not fulfil the mandate, there is no need to make further measurements.
- With a micro-luminance meter or a luminance scanner the luminance signal of and around a vertical stroke of a capital H of 12 point Arial font shall be measured. The optical axis of the luminance meter shall be aligned with the normal of the display surface at the measuring point. The misalignment between the screen surface normal and the optical axis of the luminance meter shall be less than 0.3°.
- The height (h) of the measuring windows shall be 1/3 of the actual height (H) of the character “H”. The window shall be positioned symmetrically between the horizontal stroke and the lower ending of the vertical stroke (see Figure B.2.3.1.1).

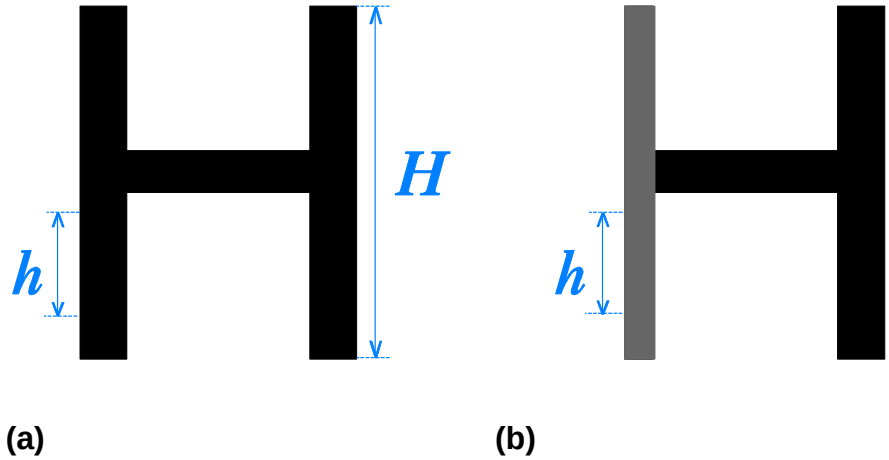

Figure B.2.3.1.1. Example of one capital "H" with (a) good contrast and one with (b) low contrast due to a paler and thinner left vertical stroke. The measuring window having height *h* shall be positioned symmetrically between the horizontal stroke and the lower ending of the vertical stroke of the H.

- The physical width of each measuring window or the matrix element shall be less or equal to 1/8 of the pixel size, but not more than 0.02 mm (cf. Figure B.2.3.1.2).

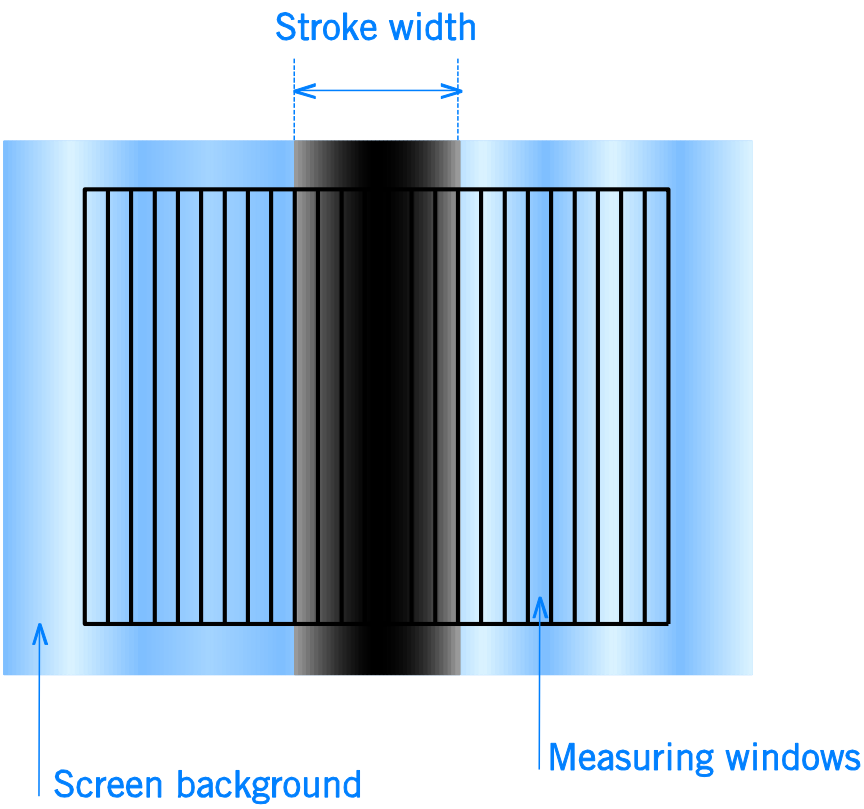

Figure B.2.3.1.2. Magnification of the vertical stroke in Figure B.2.3.1.1(a) showing a number of sampling windows.

- The basic luminance signal scanned from left to right in Figure B.2.3.1.2 could for example be as shown in Figure B.2.3.1.3.

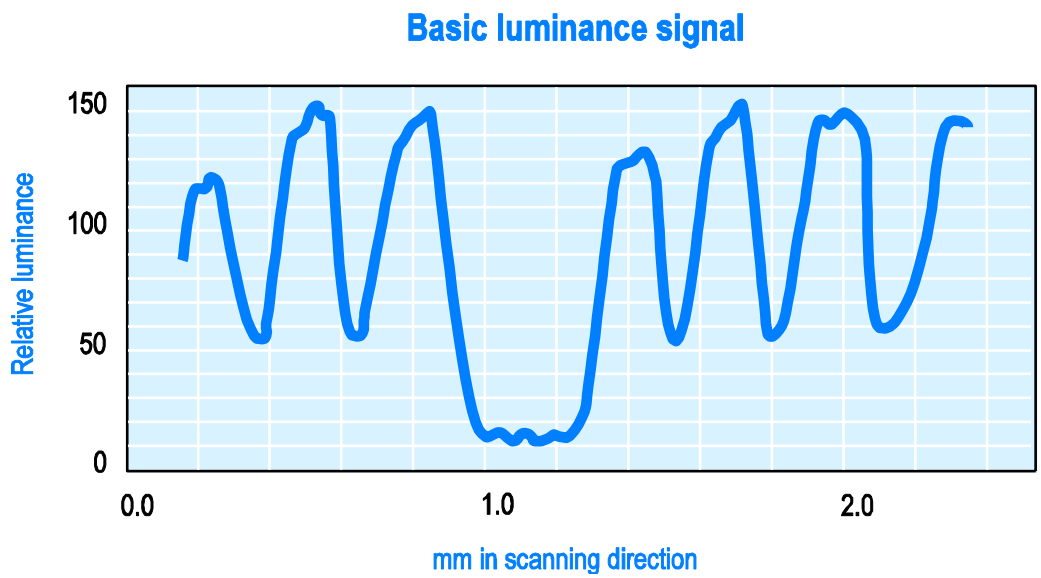

Figure B.2.3.1.3. Example of a basic luminance signal of a vertical stroke of H.

B.2.3.1.4 Test evaluation

- The basic luminance signal received from the micro-luminance meter depends on the resolution (sampling window size) of the sensor and the pixel size of the display. It is likely that the sampling window size differs between test facilities depending on photometer brand.
- The luminance contrast C shall be calculated using the formula

  $$C = \frac{L_{max} - L_{min}}{L_{max} + L_{min}}$$

  with the maximum and minimum luminances determined as described below.
- The photometer produces a basic luminance signal, which shall be filtered to a resolution of either 1 or 4 minutes of arc. These filtered signals shall be used for the calculation of C.
- To find L_{min} proceed as follows: The basic luminance signal shall be filtered to correspond to the 1 minute of arc resolution of the human visual system. This is equal to a sampling window size of 0.145 mm at 500 mm viewing distance. The filtering shall be done by applying a moving average to the basic input data. For example, the 1 minute of arc filtering applied to the luminance signal in Figure B.2.3.1.3 gives the signal in Figure B.2.3.1.4.

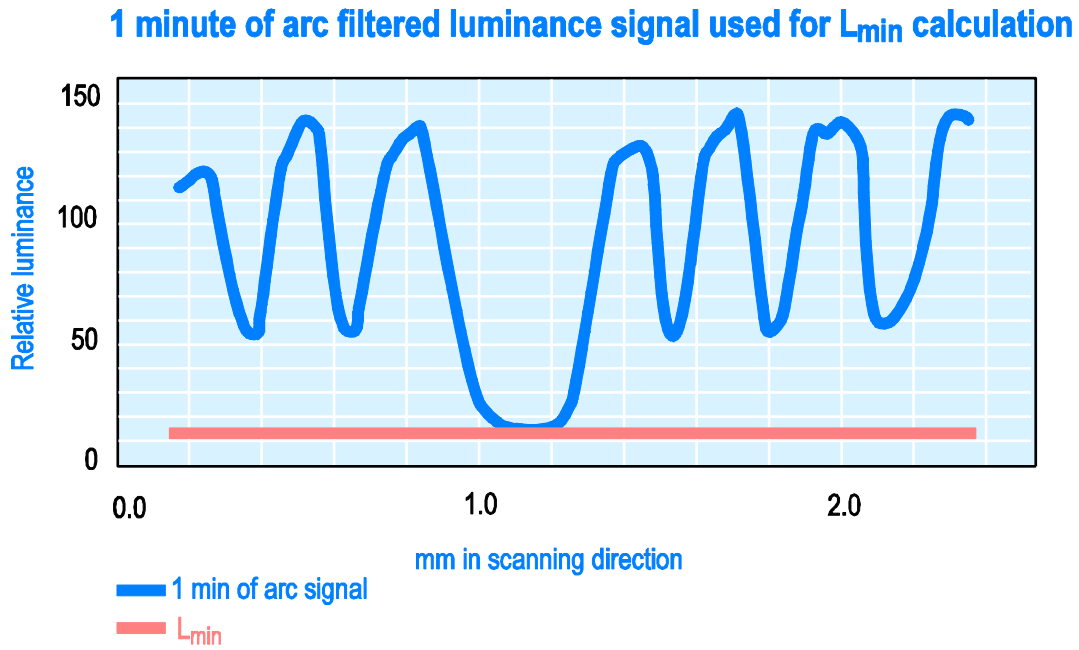

Figure B.2.3.1.4. The luminance signal filtered to 1 minute of arc and showing L_{min}.

- The lowest relative luminance in the vertical stroke in the 1 minute of arc signal is L_{min}.
  (In the example of Figure B.2.3.1.4, the L_{min} value is 14 cd/m²).
- To find L_{max} proceed as follows: The 4 minute of arc signal filtering shall be obtained by applying a moving average to the 1 minute of arc signal. This corresponds to a more comfortable viewing condition. The filtered luminance signal is shown in Figure B.2.3.1.5.

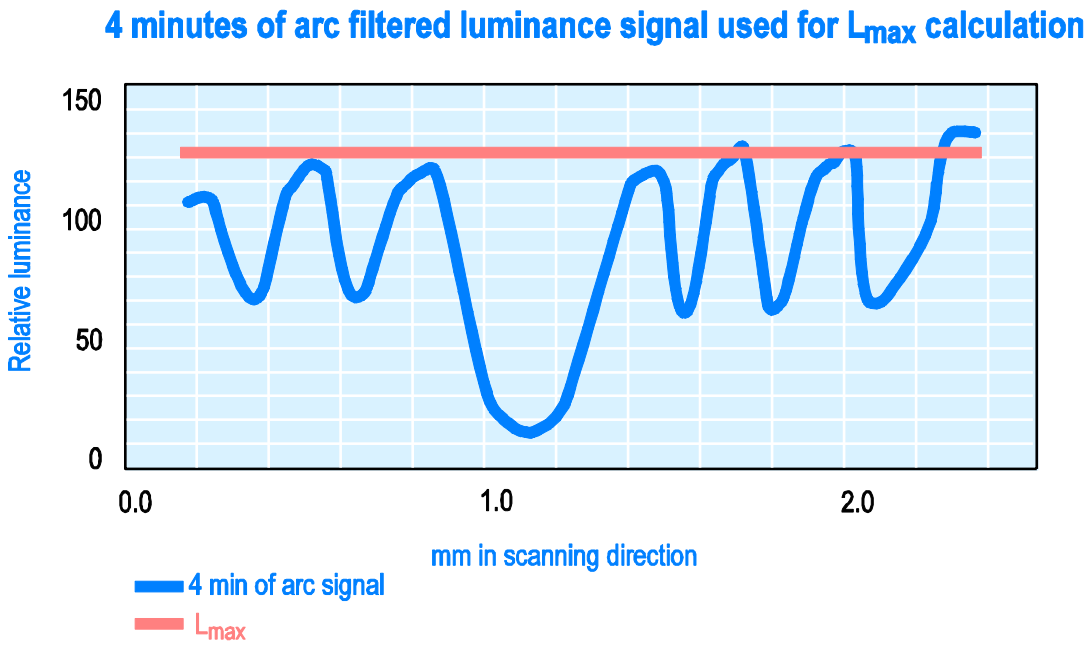

Figure B.2.3.1.5. The 1 minute of arc luminance signal filtered to 4 minutes of arc and showing L_{max}.

- The maximum luminances may be different on the two sides of the H stroke. Select the lower one as L_{max}.

  (In the example of Figures B.2.3.1.4 and B.2.3.1.5 the luminance is lower on the left side than the right side and thus

  L_{max} = 127 cd/m^2. With L_{min} = 14 cd/m^2 the contrast is C=(127-14)/(127+14)= 0.80).

  The lowest luminance contrast found shall be reported.

  The result shall be presented to 2 decimal places.

B.2.3.1.5 Overall uncertainty

≤ ± 0.05 in contrast.

See B.2.0.7.

Back to A.2.3.1

B.2.3.2 Luminance contrast – angular dependence

B.2.3.2.1 Preparation of the Notebook computer for testing

- All necessary preparations described in B.0 and B.2.0 shall be done.
- A TCO Certified default test image, as shown in Figure B.0.8.1, shall be used for this measurement.
- The 4º × 4º square shall have each of the following RGB settings: (RGB 255, 255, 255) and (RGB 0, 0, 0).

B.2.3.2.2 Equipment

Luminance meter.

B.2.3.2.3 Test method

- The luminance meter shall be positioned and directed orthogonally to the screen centre-point as described in B.2.0.5.
- The Notebook computer display shall then be rotated around a vertical axis through the screen front centre, changing the azimuth angle to + 15°. The luminance of the white square L_{W+15} and the luminance when the square is blackL_{B+15} at the centres shall be recorded.
- Finally the azimuth angle of the screen shall be changed to -15° and the new measurements $L_{W/-15}$ and $L_{B/-15}$ taken.

B.2.3.2.4 Test evaluation

The luminance contrast values C_{+15} and C_{-15} shall be calculated using the formula

$$C = \frac{L_W - L_B}{L_W + L_B}$$

Of C_{+15} and C_{-15}, only the lowest value shall be reported as the luminance contrast.

B.2.3.2.5 Overall uncertainty

≤ ± 10% in luminance.

≤ ± 0.05 in contrast.

See B.2.0.7.

Back to A.2.3.2

B.2.4 Screen colour characteristics

B.2.4.1 Correlated colour temperature (CCT) variation

B.2.4.1.1 Preparation of the Notebook computer for testing

- All necessary preparations described in B.0 and B.2.0 shall be done.
- A TCO Certified default test image, as shown in Figure B.0.8.1, shall be used for this measurement.

B.2.4.1.2 Equipment

Spectro-radiometer capable of presenting CIE u' and v' chromaticity co-ordinates with at least three decimals.

B.2.4.1.3 Test method

The spectral properties at the centre of the test square shall be measured with a spectro-radiometer.

The spectral data shall then be processed, which is normally done directly in the instrument microprocessor, to give chromaticity co-ordinates. In this case the CIE co-ordinates u' and v' are needed for the test evaluation and are often presented directly by the spectro-radiometer used.

If the client has stated more than two pre-set CCTs, preparation and testing shall be repeated for the additional CCTs.

The following rules shall apply:

- Recommended default CCTs is 6500 K, but the CCT can be anywhere between 5000K and 10000K.
- Only CCTs with exactly specified numerical values have to fulfil the requirements for Pre-set CCTs.
- CCTs lower than 5000 K shall not be tested.

B.2.4.1.4 Test evaluation

The measured u'_m and v'_m values of the screen for the pre-set CCT and the CIE reference chromaticity co-ordinates u'_{CCT} and v'_{CCT} values for the reported CCT shall be used to calculate the colour difference as follows:

$$\Delta u'v' = \sqrt{\left(u'_{CCT} - u'_m\right)^2 + \left(v'_{CCT} - v'_m\right)^2}$$

This calculation shall be done for all tested pre-set CCTs.

The CIE 1976 u' and v' reference chromaticity co-ordinates for five common CCTs are given in Table B.2.4.1.1.

Table B.2.4.1.1

CCT in K	u^1_{cct}	v^1_{cct}
9300	0.1888	0.4457
7500	0.1935	0.4586
6500 (sRGB)	0.1978	0.4684
5500	0.2044	0.4808
5000	0.2091	0.4882

If preset CCTs, other than those given in Table B.2.4.1.1, are used in the test, u'_{CCT} and v'_{CCT} can be found by using CIE tabulated data or by using CIE formulae presented in CIE Publication 15.2 (1986), Colorimetry, p.11, p. 27-28 and p. 53-54, Table 1.3.

If the spectro-radiometer used can only produce CIE 1931 x and y chromaticity co-ordinates these can be transformed to u' and v' chromaticity co-ordinates by using the formulae in the CIE Publication 15.2 mentioned above.

The relevant CIE material – conversion formulae and tabulated data for u'_{CCT} and v'_{CCT} – can also be found on the TCO Development homepage, www.tcodevelopment.com. A computer program based on the given equations can be supplied by TCO Development.

The resulting colour difference calculation shall be presented to 3 decimal places. If the Notebook has no Pre-set CCTs then the measured default colour temperature to be stated in the report shall be given in Kelvin (K).

B.2.4.1.5 Overall uncertainty

≤ ± 0.003 in u' and v'.

See B.2.0.7.

Back to A.2.4.1

B.2.4.2 Colour uniformity

B.2.4.2.1 Preparation of the Notebook computer for testing

- All necessary preparations described in B.0 and B.2.0 shall be done.
- The entire active area of the screen shall be white with the Notebook computer's colour setting at RGB 255, 255, 255.

B.2.4.2.2 Equipment

Spectro-radiometer with a capacity to present u' and v' co-ordinates with at least 3 decimals.

B.2.4.2.3 Test method

The colour uniformity shall be measured orthogonally to the Notebook computer screen plane at 9 points. The 4 corner positions (1, 3, 7 and 9) are measured 1º from the edges of the screen as shown in Figure B.2.2.2.1. The 4 side positions (2, 4, 6 and 8) are measured on the middle of the side 1º from the edge. Finally the centre position (5) is measured.

The colour uniformity shall also be evaluated visually by the technician in order to find those areas where the colour varies the most except from the 9 default positions. If a significant difference within the 1º from the edge screen area is found these measuring points shall also be measured and used to evaluate the colour uniformity.

The conditions for colour measurement in the corner positions and the distribution of other measurement points are illustrated in Figure B.2.2.2.1.

B.2.4.2.4 Test evaluation

Δu'v' in accordance with the CIE (1976) uniform chromaticity scale diagram shall be calculated for each measured position using the formula

$$\Delta u'v' = \sqrt{(u'_A - u'_B)^2 + (v'_A - v'_B)^2}$$

where A and B are the two points found to have the largest colour difference between them.

The largest difference in Δu'v' value shall be reported.

The result shall be presented to 3 decimal places.

(The evaluation procedure is exemplified below

- Make a table of colour chromaticity values for each measured position

Measurement position no.	**u [1]**	**v [1]**
1	0.190	0.447
2	0.186	0.441
3	0.186	0.437
-	-	-
-	-	-
n-1	0.185	0.434
N	0.186	0.432
Largest difference	**0.005 in this example**	**0.015 in this example**

- The largest u' difference, Δu', is 0.005 (between 0.190 and 0.185) at measurement positions 1 and n-1.

- The largest v' difference, $\Delta v'$, is 0.015 (between 0.447 and 0.432) at measurement positions 1 and n.
- Since $\Delta v'$ (= 0.015) is much larger than $\Delta u'$ (= 0.005), the $\Delta v'$ value shall be used for the calculation of $\Delta u'v'$.

The corresponding two pairs of u' and v' to be used for the calculation are thus the values found at position 1 and position n and thus become the values used for points A and B such that

$u'_1 = u'_A = 0.190$ and $v'_1 = v'_A = 0.447$ for point A in this example

and

$u'_n = u'_B = 0.186$ and $v'_n = v'_B = 0.432$ for point B in this example

Hence $\Delta u'v' = \sqrt{0.000016 + 0.000225} = 0.01552$, which shall be reported as 0.016.)

B.2.4.2.5 Overall uncertainty

$\leq \pm 0.003$ in u' and v'.

See B.2.0.7.

Back to A.2.4.2

B.2.4.3 RGB settings

B.2.4.3.1 Preparation of the Notebook computer for testing

- All necessary preparations described in B.0 and B.2.0 shall be done.
- A TCO Certified default test image, as shown in Figure B.0.8.1, shall be used for this measurement.
- The 4º × 4º squares shall have each of the following RGB settings:

  (255, 0, 0) for red,
  (0, 255, 0) for green,
  (0, 0, 255) for blue.

B.2.4.3.2 Equipment

Spectro-radiometer with a capacity to present u' and v' co-ordinates with at least 3 decimals.

B.2.4.3.3 Test method

The instrument shall be directed orthogonally towards the different test square centres at the measurement distance described in B.2.0.5. Measure the chromaticity co-ordinates at the centre of the 4º × 4º square for each colour setting specified above or the alternative larger test square image (80% of the full screen mode) described in B.0.8 may be used for these measurements.
Change the colour of the square for each measurement.

B.2.4.3.4 Test evaluation

The recorded chromaticity co-ordinates u' and v' for the red, green and blue squares shall be reported.

The u' and v' shall be presented to 3 decimal places.

B.2.4.3.5 Overall uncertainty

≤ ± 0.003 in u' and v' for red and green.

≤ ± 0.007 in u' and v' for blue.

See B.2.0.7.

Back to A.2.4.3

B.2.4.4 Colour uniformity – angular dependence

B.2.4.4.1 Preparation of the Notebook computer for testing

- All necessary preparations described in B.0 and B.2.0 shall be done.
- The screen background shall be RGB 204, 204, 204.
- Chromaticity co-ordinates u' and v' shall be measured at three different positions on the screen as shown in Figure B.2.5.4.1. Each measurement position shall consist of white RGB 255, 255, 255 squares sized 4º × 4º.
- The spectro-radiometer shall be positioned and directed orthogonally to the display centre-point as described in B.2.0.5.

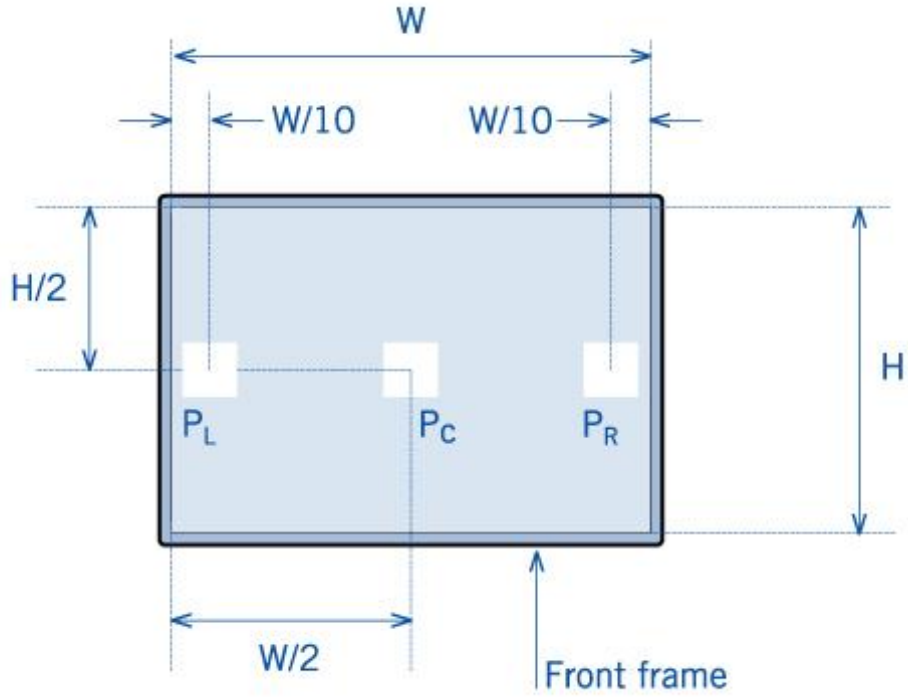

Figure B.2.4.4.1. Measurement positions for colour uniformity-angular dependence.

B.2.4.4.2 Equipment

Spectro-radiometer with a capacity to present u' and v' co-ordinates with at least 3 decimals.

B.2.4.4.3 Test method

- The spectro-radiometer shall always be directed towards a measurement point and rotated around a fixed vertical axis, (or horizontal axis for the tilt measurement) through the focal point of the front lens with a distance as described in B.2.0.5.
- The spectro-radiometer shall be turned towards positions P_C, P_L and P_R and focused. The colour co-ordinates at positions P_L and P_R ($u'_{PL/0}$, $v'_{PL/0}$ and $u'_{PR/0}$, $v'_{PR/0}$ respectively) shall be recorded.
- The screen shall then be rotated +15° around a vertical axis through the screen centre-point and the chromaticity co-ordinates at positions P_L, P_R, ($u'_{PL/+15}$, $v'_{PL/+15}$ and $u'_{PR/+15}$, $v'_{PR/+15}$ respectively) shall be recorded.

- The screen shall finally be rotated -15° around a vertical axis through the screen centre-point and the chromaticity co-ordinates at positions P_L, P_R, ($u'_{PL/-15}$, $v'_{PL/-15}$ and $u'_{PR/-15}$, $v'_{PR/-15}$ respectively) shall be recorded.
- Pivot screens shall only be measured in the normal landscape mode.

B.2.4.4.4 Test evaluation

Δu'v' in accordance with the CIE (1976) uniform chromaticity scale diagram shall be calculated for each measured position using the formula

$$\Delta u'v' = \sqrt{(u'_A - u'_B)^2 + (v'_A - v'_B)^2}$$

where A and B are the two points found to have the largest colour difference between them.

The largest difference in Δu'v' value shall be reported

The result shall be presented to 3 decimal places.

(The evaluation procedure is exemplified below

- Make a table of chromaticity values for each measurement position and calculate Δu'v' for +15° for and -15°

Measurement position no.	**Example value u'**	**Example value v'**
PL /+15	0.190	0.447
PR /+15	0.187	0.442
Difference at +15°	0.003	0.005
Δu' v' at +15°	0.0059	
Measurement position no.	**Example value u'**	**Example value v'**
PL /-15	0.182	0.436
PR /-15	0.189	0.432
Difference at -15°	0.007	0.004
Δu' v' at -15°	0.0081	
Largest difference Δu' v'	0.0081 in this example	

The largest calculated Δu'v' difference is 0.0081 when the display is rotated -15°. The test value to be reported is this value, reported to 3 decimal places, thus 0.008.

B.2.4.4.5 Overall uncertainty

≤ ± 10% in luminance.

≤ ± 0.003 units for u' and v'.

≤ ± 0.3° in rotation angle.

See B.2.0.7.

Back to A.2.4.4

B.2.4.5 Colour greyscale linearity

B.2.4.5.1 Preparation of the Notebook computer for testing

- All necessary preparations described in B.0 and B.2.0 shall be done.
- A TCO Certified default test image, as shown in Figure B.0.9.1, shall be used for this measurement.
- The 4º × 4º square shall have each of the following RGB settings: R=G=B= 255, 225, 195, 165, 135, 105

B.2.4.5.2 Equipment

Spectro-radiometer with a capacity to present u' and v' co-ordinates with at least 3 decimals.

B.2.4.5.3 Test method

The instrument shall be directed orthogonally towards the different test square centres at the measurement distance described in B.2.0.5. Measure the chromaticity co-ordinates at the centre of the 4º × 4º square for each greyscale step specified above. Change the greyscale of the square for each measurement.

B.2.4.5.4 Test evaluation

The evaluation procedure is exemplified below

- TCO Development will provide an excel spread sheet at the TCO Development website www.tcodevelopmet.com which will calculate the Δ u' v' differences between all the greyscale levels according to the equation:

$$\Delta u'v' = \sqrt{(u'_A - u'_B)^2 + (v'_A - v'_B)^2}$$

- Fill in the chromaticity values of u' and v' for each measured greyscale step into the corresponding cells of the spread sheet.

The table A.2.5.5 contains coloured cells indicating difference requirements. The principle is that the darker the greyscale the more difficult it is to see a colour difference.

Examples on how to use the table: By using the column 255 (greyscale 255) and go down to line 165 (greyscale 165) you find that the maximum allowed colour difference Δu´v´ is 0.050 (orange cell). For the greyscales 225 and 105 the maximum allowed difference is 0.055 (blue cell).

B.2.4.5.5 Overall uncertainty

≤ ± 10% in luminance.

≤ ± 0.003 units for u' and v'.

See B.2.0.7.

Back to A.2.4.5

B.2.5 Reflection characteristics

B.2.5.1 Key cap contrast

B.2.5.1.1 Preparation of the Notebook computer for testing

- No special preparation of the Notebook computer is needed.
- The Notebook computer keyboard to be tested for contrast characteristics shall be clean.
- Measurement areas shall be as flat as possible in order to avoid measuring errors.
- A micro-photometer for luminance measurement shall be aligned orthogonally to the Notebook computer display.

B.2.5.1.2 Equipment

A micro-luminance meter such as an array photo detector capable of measuring luminance on structures ≤0.02 mm. Measurement requirements are given in clause B.2.0.2.

B.2.5.1.3 Test method

The test method is in principle the same as for B.2.3.1 Luminance contrast – characters

- B.2.5.1 is written for positive polarity (dark marking on a bright background). If the key cap marking has negative polarity (bright marking on a dark background) the 2 pictures in B.2.3.1.4 will be inverted. <u>The 1 minute of arc filtering shall always be applied to the key marking and the 4 minute of arc filtering shall always be applied on the background no matter what polarity is used.</u>
- The selected key cap surface for measurement shall be illuminated with uniform diffuse white stable light either from an integrating sphere, which is placed very close to the measured area, or by stable diffuse lighting. (Note: Low diffuse light intensity may create measurement uncertainty so pay attention to the specifications of the micro luminance meter used.)
- With a micro-luminance meter or a luminance scanner the luminance signal of and around a vertical stroke of a capital H of the key top marking shall be measured. The optical axis of the luminance meter shall be aligned with the normal of the key top surface at the measuring point. The misalignment between the key top surface normal and the optical axis of the luminance meter shall be less than 0.3°.
- The height (*h*) of the measuring windows shall be 1/3 of the actual height (*H*) of the character "H". The window shall be positioned symmetrically between the horizontal stroke and the lower ending of the vertical stroke (see FigureB.2.3.1.1).
- The physical width of each measuring window or matrix element shall be less or equal 0.02 mm (see Figure B.2.5.1.2).
- The luminance may be different on the two sides of the H stroke. If the key marking has dark text on bright background, select the least bright side as $L_{max.}$ If instead the key cap marking has bright text on dark background the more bright side shall be chosen as $L_{min.}$

B.2.5.1.4 Test evaluation

The test evaluation is in principle the same as B.2.3.1.4.
The lowest key cap contrast found shall be reported.

The result shall be presented to 2 decimal places.

B.2.4.1.5 Overall uncertainty

≤ ± 0.05 in contrast.

See B.2.0.7.

Back to A.2.5.1

B.2.5.2 Keyboard gloss

B.2.5.2.1 Preparation of the Notebook computer for testing

- No special preparation of the Notebook computer is needed.
- The Notebook keyboard to be tested shall be clean.
- A gloss measurement instrument needs an absolutely flat surface to function properly.
- If the keyboard of the Notebook computer is curved, a measurement could be made elsewhere on the housing, provided that the measured surface microstructure, texture and colour are identical.
- If no absolutely flat test surface can be found on the keyboard surface, then the manufacturer can also supply a flat piece of material with optical properties fully equivalent to the keyboard material.

B.2.5.2.2 Equipment

A gloss meter in accordance with ISO2813, ASTM D 523 or DIN 67 530 and a calibrated reference standard.

The measurement of gloss shall be made using an instrument with an incident light beam angle of 60° to the normal of the measured surface.

B.2.5.2.3 Test method

Measurement of gloss shall be made at several locations on the Notebook keyboard bezel which is in the line of sight of the user. Measurements shall also be made on the keyboard keys. Logos, brand names, type marks, control buttons, cameras and other small markings are excluded from the measurements and the requirements.

B.2.5.2.4 Test evaluation

A gloss result shall be presented in gloss units with no decimal places.

The highest recorded gloss value shall be reported.

B.2.5.2.5 Overall uncertainty

≤ ± 2 gloss units.

See B.2.0.7

Back to A.2.5.2

B.4 Emissions

B.4.1 Acoustic noise

The acoustic noise test shall only be carried out if the Notebook has any internal moving mechanical parts

B.4.1.1 Method

This noise measurement may be done at any test facility accredited according to ISO17025 but the test report must be verified by the TCO Accepted test facility who must signs a verification document for noise, covering all configurations.

Prior to testing, the computer shall have been switched on for 15 minutes.
Switch on the computer and begin recording elapsed time, starting either when the computer is initially switched on, or immediately after completing any log in activity necessary to fully boot the system. Once logged in with the operating system fully loaded and ready, close any open windows so that the standard operational desktop screen or equivalent ready screen is displayed.
Exactly 15 minutes after the initial boot or log in, start to accumulate test noise levels.

The noise measurements shall follow ISO 7779:2010 and shall be declared according to ISO 9296:1988. (However the principle for how the measurement uncertainty is handled shall be the same as for all the other criteria in this TCO Certification. This means that no uncertainty shall be added to the result presented in the report.)

In addition to reporting the measured *A-weighted sound power level* (L_{WA}) in Bels (B) the single measurement values of the 9 measurement positions and the mean value of these A-*weighted sound pressure level* (L_{pA}) in Decibels (dB) have to be included in the test report.

B.4.1.2 Overall uncertainty

The test shall be performed in such a way that the total extended uncertainty in the test result will be less than ± 2.5dB.

Note
The uncertainties given are worst case limits. In many cases it will be possible to obtain better accuracy.

Back to A.4.1

B.6 Environment

B.6.0 General Clarification

B.6.0.1 Signatures

The date of signature shall not be older than 12 months at the time of the application. The templates in the ecological declaration shall be sent either with original signatures or as copies of original documents with original signatures. “Copies” are for example telefaxes or pdf-files of scanned signed documents. TCO Development and/or the responsible test facility may later request the original signed document.

However, copies will not be accepted where the signature has been scanned and pasted into the document.

TCO Development accepts digital signature as an alternative to traditional signature on test reports and declarations submitted as pdf files. To approve a digital signature it is necessary to also submit a digital key to the verifier to facilitate identification.

B.6.1 Product description

The A.6.1 template shall be completed with the requested information about the Notebook. This includes the display, panel and external power supply.

A type key that includes an Asterisk (*) for unidentified characters, if any, in the model name and panel identification name shall be submitted to the verifier. Only two * may be used in the model type key and each * must include two or more options. For the most up-to-date information about type keys, see the appropriate product Application Process at www.tcodevelopment.com

Back to A.6.1

B.6.2 Manufacturing

B.6.2.1 Environmental management system certification

The certificate shall be issued by a certification body that is accredited by an accreditation body covered by the International Accreditation Forum, www.iaf.nu, Multilateral Arrangement on Environmental Management Systems.

The applicant shall submit an ISO 14001 certificate or EMAS registration for every final assembly plant used to manufacture products certified according to TCO Certified.

For applicants submitting several applications, it is sufficient to attach ISO 14001 certificate(s) or EMAS registration(s) with the first application. The certificate(s) or an appendix to the certificate(s) shall show the scope of the certification.

Manufacturing plants that are not yet certified (and that do not fall into the above mentioned category) can seek a 12 months grace period on the first application to obtain ISO14001 certification or EMAS registration. TCO Development reserves the right to deny grace period if the applicant is considered a high risk for not meeting the 12 month due date. When seeking grace period an agreement must be completed/signed by the applicant company.

Back to A.6.2.1

B.6.3 Climate

B.6.3.1 Energy consumption – Notebook computer

Testing of the product shall be made according to the most recently published version of the Energy Star standard for computers and need only cover the energy consumption requirements of that standard. The product need not be Energy Star certified to be approved for TCO Certified.

Testing is required to be carried out at either test facilities approved by TCO Development or by the U.S. Environmental Protection Agency (EPA). Test facilities shall also be accredited to ISO17025. In both cases the TCO Development approved facility is required to issue a verification report to confirm compliance.
In circumstances there the FPD is certified to the most recent Energy Star standard the TCO Development approved test facility need only verify that the stated energy consumption levels are within required limits, that the EPA test report is genuine and from a lab that is approved by the EPA and accredited according to ISO17025.

B.6.3.1.1 Special conditions

All exceptions and special requirements, test methods etc. specified by Energy Star are also accepted by TCO Development.

Products that are covered under other Energy Star product specification shall be tested under that specification.

If testing concerns an update of an original certification (additional panel or adapter) that was issued to an older version of an Energy Star standard, then that older version may be used for testing.

Back to A.6.3.1

B.6.3.2 Energy consumption – external power supply

TCO Development has decided that energy consumption of the external power supply shall follow the EPA demands for compliance with The International Efficiency Protocol requirement for level V, equivalent to the Energy Star version 2.0 for external adapters, also covering battery chargers.

The international efficiency mark consists of a Roman numeral (I – VI) that corresponds to specific minimum Active and No-Load efficiency levels (as well as a power factor requirement for level V) and is printed/applied by the manufacturer on the external power supply marking label.

A test facility approved by TCO Development will require a copy of the display's external power supply marking label where The International Efficiency Protocol requirement for level V symbol is visible as proof of compliance.

Back to A.6.3.2

B.6.4 Hazardous substances

B.6.4.1 Cadmium (Cd), mercury (Hg), lead (Pb) and hexavalent chromium (CrVI)

Exemptions are according to EU Directive 2011/65/EU (RoHS) and the documents supporting the directive except that mercury in lamps is not permitted.

The maximum concentration values tolerated by weight in homogeneous materials for cadmium, mercury, lead and hexavalent chromium are according to EU Directive 2011/65/EU (RoHS) and the documents supporting the directive.

The limit value for batteries is 0.0005 % for mercury, 0.002 % for cadmium and 0.004 % lead per listed part, according to EU Directive 2006/66/EC.

Back to A.6.4.1

B.6.4.2 Halogenated substances

Mandate 1. The requirement applies to plastic parts in all assemblies and sub-assemblies. LCD panels are included in the requirement.

Exempted are printed wiring board laminates, electronic components and all kinds of cable insulation.

Mandate 2. The requirement applies to the whole of the Notebook computer product, including components, parts and raw materials in all assemblies and sub-assemblies e.g. batteries, paint, surface treatment, plastics and electronic components. Printed Wiring Boards are also included in the requirement.

HBCDD has been identified as a Substance of Very High Concern in accordance with EU REACH criteria. The main application of HBCDD in EEE is as a flame retardant in HIPS plastic being used for closures and structural parts of different types of EEE. TCO Development considers that the use of HBCDD in EEE is not deemed essential as technically suitable alternative substances and materials are available and already used extensively today.

Maximum concentration values tolerated for a restricted substance (including decaBDE) is 0.1 % by weight in homogeneous materials.

Fluoroorganic additives, used to modify the dripping behaviour of plastics in fire conditions or to improve the processing behaviour, are exempted provided that they do not exceed 0.5 % by weight of the material in homogeneous material.

Back to A.6.4.2

B.6.4.3 Non-halogenated substances

Non-halogenated flame retardants can be used in TCO Certified products once they receive an accepted benchmark. TCO Development makes a list of accepted substances available on its website. The Accepted Substances list is dynamic, which allows new substances that have undergone a valid assessment to be added or for accepted substances to come under reassessment in light of new scientific findings. If an accepted substance is reassessed and given a benchmark score lower than 2 TCO Development reserves the right to remove the substance from the accepted substance list. Any substance to be removed will be set a sunset date. The sunset date shall give adequate time (at least one year) for equipment manufacturers to switch to a flame retardant alternative.

When considered necessary, TCO Development reserves the right to request a substance undergo further assessment in order to assess the completeness, quality and validity of a draft benchmark score, such as a GreenScreen Verification assessment.

Full GreenScreen Assessments of substances are made publicly available on databases such as GreenScreen Store http://www.greenscreenchemicals.org/gs-assessments/chemicals or IC2 (Interstate Chemicals Clearinghouse) http://theic2.org/hazard-assessment or Techstreet http://www.techstreet.com/searches/3638231. If no public assessment report is available, then TCO Development may place interested persons in contact with the owner of the report.

Table B.6.4.3.1

Benchmark key		
Benchmark 4	Few concerns, i.e. safer chemical	Approved for use
Benchmark 3	Slight concern	Approved for use
Benchmark 2	Moderate concern	Approved for use
Benchmark 1	High concern	Not accepted
Unspecified (U)	Insufficient data to assign a benchmark	Not accepted

B.6.4.3.1 Compliance procedures (See also Flow chart B.6.4.3.1)

- **First contact your suppliers such as the plastic and panel manufacturer and ask them to confirm that they only use flame retardants including substances on the accepted substance list.**

- **If all flame retardants only include substances on the Accepted Substances List the procedure is as follows**:
  1. Sign template A.6.4.3 and submit it to the approved environmental verifier. When the verifier considers all environmental documentation is compliant they will issue an Environmental verification to the applicant.

- **If any flame retardant is used that contains a substance that is not on the Accepted Substances List** then it will need to be added before approval can be given by the environmental verifier. For this the procedure is as follows:
  1. Contact TCO Development directly to see if we have any additional information on the substance: Reasons for the substance's absence can be that the substance has received benchmark 1, no assessment has been conducted or it has a benchmark score U (unspecified) due to many data gaps.
  2. If TCO Development requires the substance to be benchmarked, we recommend you contact your supplier and inform them that the substance will need a GreenScreen assessment by a licensed profiler. The list of licensed profilers can be found on the CPA website at http://www.greenscreenchemicals.org/professionals/profilers
  3. A draft report per substance (not flame retardant) is assembled from the available information (literature search, structural similarity comparison, expert judgment) by the profiler.
  4. It is the profiler that sets the benchmark score per relevant substance, which is valid for 3 years. Substances are assessed at 3 year intervals since mandates are revised and more data and new knowledge on the substance may lead to other results.
     Note: All assessments **and** reassessments shall be conducted by licensed profilers.

  5. Full GreenScreen **assessments per substance** shall be submitted to TCO Development for final approval before the Accepted Substances List can be updated.
  6. Once a substance is added to the list and the verifier identifies them, then they will issue the environmental verification to the applicant (see above point 1 under: **If all flame retardants only include substances on the Accepted Substances List the procedure is as follows**)

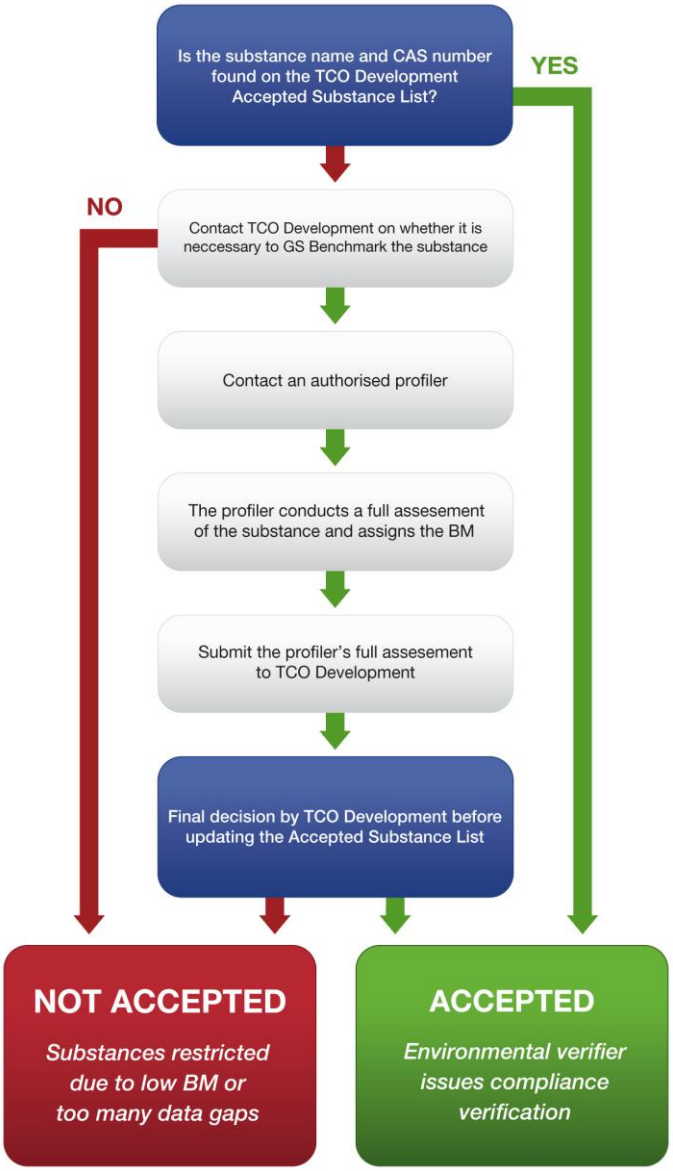

Flow chart B.6.4.3.1. The Compliance procedure

B.6.4.3.2 Grace period

Applicants signing mandate A.6.4.3 have the option to seek a grace period in order to give them time to assess flame retardants used and substitute these if necessary. The request for a grace period shall be sent to TCO Development together with a description on why a grace period is necessary and a timeline for the GreenScreen assessment and/or substitution. On receiving this request, TCO Development will conduct a risk assessment as to whether the applicant can be given a grace period to show compliance. If a grace period is not granted, then the applicant is required to ensure that all used non-halogenated flame retardants only include substances that are on the TCO Accepted Substances list before a certificate can be issued to them. After the grace period, if an approved a grace period exceeds the due date, then the verifier shall contact TCO Development and a course of action will be decided after talking first with the applicant.

Back to A.6.4.3

B.6.4.5 Phthalates

Maximum concentration values tolerated for a restricted substance is 0.1 % by weight of any plasticised homogenous material.

Back to A.6.4.5

B.6.4.6 Hazardous substances in product packaging

Limit values are according to Directive 94/62/EC on packaging and packaging waste.

Back to A.6.4.6

B.6.5 Material Resource Efficiency

B.6.5.1 Lifetime extension

That spare parts shall be available for three years from “the time that production ceases” is only applicable to the production of the specific Notebook computer, certified by the brand owner according to TCO Certified.

Regarding spare parts:

- If a part of a product is broken (e.g. bezel, stand) the end user shall not need to replace the whole product, only the broken part. The broken part shall be possible to replace with an equivalent part (this part does not have to be identical to the broken part).
- When the cost for replacing a broken part (e.g. panel) exceeds the cost of replacing the whole product, then that part need not be considered as a spare part under this mandate.

Back to A.6.5.1

B.6.6 End of life

B.6.6.1 Material coding of plastics

If the amount of flame retardant exceeds 1 % by weight the coding shall be complemented in accordance with ISO 1043-4.

The requirements also apply to plastics in the LCD panel, however labelling of the light guide may instead consist of the application of a label in close proximity, for example PLASTIC LIGHT GUIDE:>*plastic type(s)*< or >PLASTIC LIGHT GUIDE:*plastic type(s)*<. Labelling of Plate diffuser (not thin plastic film diffuser) shall follow the same rules as for the light guide.
The requirement does not cover other thin plastic films in the panel due to difficulties in labelling these.

Back to A.6.6.1

B.6.6.2 Take back system

Tick the box of the option chosen.

If the applicant chooses **option 1** (*Product only sold on markets with WEEE legislation or similar*) and signs the declaration, the requirement is fulfilled.

If **option 2 or 3** (*World-wide product take back* or *One additional market lacking WEEE legislation where product take back is offered*) is chosen, the declaration must be signed and the applicant must provide a short description of how the take-back system on that market works. This can also be done by giving a reference (for example a link to a website) to the representative, associated company or affiliate taking care of the take-back system on that market.

In case of option 3 the applicant must also provide the name of the market (country) where a take back system is provided.
TCO Development has no requirement on the take-back system being free of charge.

It is important to point out that any recycling and waste export control legislation in countries where the applicant company operates must always be met.

Back to A.6.6.2

B.7 Socially Responsible Manufacturing

B.7.1 Supply chain responsibility

B.7.1.1 General Clarifications

The mandate is a social performance mandate and criteria are based on the eight ILO (International Labour Organization) core conventions and local legislation. The mandate stipulates the minimum standards for Code of Conduct, Inspection and Corrective Action engagement of the brand owners regarding the situation at their own and/or their supplier's manufacturing facilities of TCO Certified products..

B.7.1.2 Background information

B.7.1.2.1 SA8000

SA8000 is based on the UN Universal Declaration of Human Rights, Convention on the Rights of the Child and various International Labour Organization (ILO) conventions. SA8000 is a global social accountability standard for decent working conditions, developed and overseen by Social Accountability International (SAI). SAI contracts with a global accreditation agency, Social Accountability Accreditation Services (SAAS) that licences and oversees auditing organisations to award certification to employers that comply with SA8000.
For more information visit: http://www.sa-intl.org/

B.7.1.2.2 Electronic Industry Citizenship Coalition (EICC)

The Electronic Industry Citizenship Coalition (EICC) is a group of companies working together to create a comprehensive set of tools and methods that support credible implementation of the Electronic Industry Code of Conduct. The EICC Code of Conduct is at the core of member requirements and members are required to commit to it, spread that commitment to their supply chains and undertake a range of assessment activities to ensure they are accountable to their commitment to the Code.
The EICC VAP (Validated Audit Process) is a factory audit framework for identifying risks and driving improvements and robust management systems for labour, ethics, health, safety and environmental conditions in the supply chain. It is a third party validated audit service that provides an independent audit of a supplier, potential supplier, and/or a company's own facilities.
For more information visit: http://www.eicc.info/

B.7.1.2.3 Grace Period.

Brand owners signing mandate A.7.1 for the first time have the option to seek a 12 month grace period in order to give them time to improve their supply chain management systems. On receiving this request, TCO Development will conduct a risk assessment as to whether the brand can be given a grace of 12 months to show compliance. If a grace period is not granted, then the brand is required to make all required improvements and actions before a certificate can be issued to them.
After 12 months, if an approved a grace period exceeds the due date, then the verifier shall contact TCO Development and a course of action will be decided after talking first with the brand owner.

B.7.1.3 The verification process

B.7.1.3.1 Proof documentation to be submitted to a Social Reviewer approved by TCO Development

1. Submitting the code of conduct
   The Brand owner shall submit a copy of their code of conduct signed (on the document copy or declaration of identity) by the SMR (or higher ranking member of the company) to an approved Social Reviewer. If the Code of conduct has not changed since last time it was reviewed the brand does not have to send it again. In this instance the SMR shall declare this.

   SA8000: If the brand owners head office is certified according to SA8000 then the code of conduct does not have to be reviewed by the Social Reviewer. It is enough to send a copy of the SA8000 certificate to the Environmental Verifier and the Code of conduct with the application to TCO Development.

2. Submitting the proof of the supply chain being informed of the code of conduct.
   The Brand owner shall submit a description on how their first tier manufacturing facilities of TCO Certified products are informed of their code of conduct for review by an approved Social Reviewer..

   SA8000: If the brand owners head office is certified according to SA8000 then a description does not have to be reviewed by an approved Social Reviewer. It is enough to send a copy of the SA8000 certificate to the Environmental Verifier and the description with the application to TCO Development.

3. Submitting the annual factory list
   The Brand owner shall submit an annual list of all first tier manufacturing facilities of TCO Certified products to the Environmental Verifier and TCO Development. The list shall show the factory name, address, date of conducted audit, date of planned audit and type of audit. Each factory shall have an audit date assigned to it. All these audits may be first, second or third party audits (at least one of the audits shall be 3rd party and have been conducted within 12 months from the date the list is submitted). The list shall show that all factories have or will be audited once over a 3 year period.

4. Submitting the annual third party audit report
   The Brand owner must submit one annual third party audit report carried-out at a first tier manufacturing facility of TCO Certified products for review by an approved Social Reviewer. The audit report shall at least cover the criteria in A.7.1 of TCO Certified and be of equal quality as an EICC audit. When possible the audit report shall be from a different first tier manufacturing facility than the previous years unless otherwise specified by TCO Development.

   SA8000: If the first tier manufacturing facility is certified according to SA8000 then the third party audit report does not have to be reviewed by an approved Social Reviewer. It is enough to send a copy of the SA8000 certificate to the Environmental Verifier and a copy of the audit report with the application to TCO Development.

5. Submitting the annual corrective action plan (CAP) if relevant.
   The Brand owner must submit one corrective action plan (CAP) review for any non-conformity found in the submitted audit report to an approved Social Reviewer

   SA8000: If the first tier manufacturing facility is certified according to SA8000 then the CAP does not have to be reviewed by an approved Social Reviewer. It is enough to send a copy of the SA8000 certificate to the Environmental Verifier and a copy of the CAP with the application to TCO Development.

B.7.1.3.2 On-site inspection initiated by the Brand owner (Social revision)

In accordance with the compliance options under A.7.1 the Brand owner shall provide a third party conducted social audit and a CAP for any non-conformities carried out at one of their first tier facilities producing TCO Certified products. The following applies:

- The Brand owner may choose the third party Audit firm.
- Third party auditors used by the Brand owner to carry-out the factory inspection and issue the report shall have documented experience of carrying out social auditing. The auditor should have undergone the SA8000 Advanced Auditor Training or an equivalent training course
- A third party is considered to be a person or body that is recognised as being independent of the parties involved, as concerns the issue in question. Parties involved are normally the Brand owner (first party) and purchaser (second party).

B.7.1.3.3 Review of the proof documents

The approved Social Reviewer will evaluate the documents according to the following principles.

- **Code of conduct:**
  - The code of conduct shall be considered consistent with the ILO:s eight Core Conventions, art 32 in UN:s Convention on the Rights of the Child, the health and safety legislation in force in the country of manufacture, and the labor law, including rules on minimum wage and the social security protection in the manufacturing country
  - The contents of the code of conduct shall have been adopted by the Board and addressed by management.
  - The code of conduct shall relate to the manufacturing of the specific product being certified.
- **Supply chain being informed of the code of conduct:**
  - Examples may be that the Brand Owner has translated the Code of Conduct into local languages. This shows that the company has made efforts so that management and employees are able to be informed about the code's content in their own language.
  - Or the company has conducted training on the Code for employees and/or management at production facilities.
  - Another common way to inform production facilities can be to have them fill out a questionnaire (self-assessment) on compliance with the code.

- **Audit report reviews:** Central to the compliance options is the review of the factory audit report. The review of the Factory Audit report is conducted by a third party Social Reviewer approved by TCO Development. Audit reports sent for review shall not be older than 12 months. It shall be authentic, conducted by an auditor with the correct competence and cover the relevant manufacturing site.
- **Corrective Action Plan (CAP)**: If there were findings during the factory inspection then a CAP (remedial plan plus timelines and evidences) for the findings shall be submitted for review together with the audit report. This CAP will be evaluated for effectiveness by the Social Reviewer. A judgement on the remedial effectiveness and a summary will be given in the Verification Report issued by the Social Reviewer..

- **The approved verifier: Social Reviewer:** All supporting documentation shall be reviewed by a third party approved by TCO Development. This reviewer shall not be the same person that conducted the factory audit. The reviewer has the authority to review and verify the following types of documents:
  - Code of conducts
  - Communication of the code of conduct
  - Audit reports,
  - CAPs,
  - SA8000 certificates/audits
  - Supporting documentation

After the review the Social Reviewer issues the Audit Report Verification document to the Brand owner or the applicant. It is the final responsibility of the Brand owner to submit this document to TCO Development to prove that they are aware of the situation at the factory and accept the report.
A verification report issued by the approved Social Reviewer is valid for 12 months from the date of the Brand owner's first issued TCO Certified certificate covering mandate A.7.1. The verification must be updated annually. The list of approved Social Reviewers is found at: www.tcodevelopment.com

B.7.1.3.4 On-site inspection initiated by TCO Development (Spot-checks)

TCO Development reserves the right to require full audit reports and conduct or commission on-site inspections at first tier manufacturing facilities to verify that the Brand owner is fulfilling the obligations according to this mandate. The planning of social audits will be done in cooperation with the Senior Management Representative appointed by the Brand owner. Audits will be implemented by TCO Developments partner organisation for the actual geographic region. Social audits initiated by TCO Development will be realized on a judgement sample basis, in each case decided by and financed by TCO Development. Results from the audits will be shared with audited factory (both management and worker representatives) and all the brand owners listed as using the audited factory in order to create a combined effort toward implementing the CAP. For TCO Development, the spot-checks and all other submitted reports contain valuable information on social performance, making it possible to translate findings into metrics and then measure improvement through code of conduct and audit methodology.

Back to A.7.1

B.7.2 Senior Management Representative

B.7.2.1 General Clarifications

The mandate underlines the importance for the Brand owner to appoint a senior management representative who, irrespective of other responsibilities, has the authority to ensure that the requirements of this mandate are met. This aims to create an open and transparent dialogue between TCO Development and top management at the brand owner company.

B.7.2.2 SMR review

The intention of the review of the SMR is to ensure that the SMR has the necessary authority and is working in a structured way in implementing the Brand owner's code of conduct. The SMR may bring assistants to the review meeting if needed. The following questions will be asked of the SMR:

1. The SMR will be asked questions on how the communication of the Brand owner's code of conduct to first tier factories has been done. (See point 1 of the self-assessment questionnaire)
2. The SMR will be asked questions about the Brand owner's audit schedule and about some of the audits that have been done. (These reports may be first, second or third party audits).
3. The SMR will be asked to show examples of progress for some corrective action plans.
4. The SMR will be asked to fill in the self-assessment questionnaire on proactive work (point 2-19) by TCO Development (B.7.2.2.1) prior to the review and explain in more detail the Brand owner's proactive work to implement their code of conduct during the review. The SMR might be asked to show supporting documentation for this. The self-assessment questionnaire does not have to be reviewed by a verifier approved by TCO Development. It is sent directly to TCO Development prior to the SMR review.

The Questionnaire and Guidelines for the assessment are public and can be downloaded at: www.tcodevelopment.com

As long as the SMR is able to show the relevant documents and explain the Brand owner's structured work to implement their code of conduct the review is accepted. If the SMR is not able to get hold of necessary documents or if he/she cannot explain about the Brand owner's structured work to implement their code of conduct the review is not accepted.

The review may be done through an online meeting. However, it is necessary that documents can be shared (during or prior to the meeting) and that the communication quality is adequate for full understanding.

If it is not possible to set up an online meeting that fulfils the requirements above or if the review does not give an acceptable result then TCO Development has the right to require the SMR to be reviewed by a third party auditor paid by the brand owner. The report from this review is then sent to TCO Development.

TCO Development also has the right to require a face to face review of the SMR. For this type of review, TCO Development will cover their own costs.

B.7.2.2.1 Self-assessment questionnaire on proactive work

The self-assessment questionnaire is provided by TCO Development and is a set of questions covering such areas as the implementation of the Brand owner's code of conduct, auditing and follow-up of social criteria, trade union rights and representation, activities to avoid discrimination and create an open dialogue with suppliers.

The Brand owner SMR is responsible for answering all questions and providing documented proof of how it supports its suppliers in these areas. Each answer is colour graded full- (Green), partial- (Yellow) or non- (Red) compliance level.

In order to highlight the need for progressive improvement and level the commitment between different brands, the questionnaire is required to be submitted annually during the SMR review. However, the self-assessment questionnaire does not have to be reviewed by a verifier approved by TCO Development. It is sent directly to TCO Development prior to the SMR review.

There is currently no minimum level required for the proactive work reported in the questionnaire (point 2-19) in this generation of TCO Certified. The data collected in the questionnaire on proactive work will be used to risk assess Brand owners for the spot-check program. In this program TCO Development make annual third party factory audits according to the code of conduct on a number of Brand owners first tier factories. The questionnaire is also intended to measure the progress in the industry and to be used as a basis for future criteria development in this area.

The Questionnaire and Guidelines for the assessment are public and can be downloaded at: www.tcodevelopment.com

Back to A.7.2

B.7.3 Conflict minerals

B.7.3.1 General Clarifications

The mandate mainly focuses on the 3T+G minerals which are being mined within the Democratic Republic of Congo (DRC) region and used in a wide range of computer products. Once refined the origins of minerals are hard to trace, therefore we are recommending the importance of participation with legitimate in-region initiatives that directly benefit people in the conflict-affected regions. However, since the number of participants for in-region initiatives are low at this stage we also accept involvement in smelter/refinery certification programs since they complement in-region initiatives. Also we approve brands that can satisfactorily provide proof that they have adopted the *OECD Due diligence guidance*, since it provides a framework for brands to ensure that they respect human rights and do not directly or indirectly contribute to conflict.

B.7.3.2 Background information about the initiatives

TCO Development is demanding brands address the conflict mineral concerns of the private and public sector while delivering solutions that benefit those involved in the responsible minerals trade in the DRC. TCO Development considers participation in the following initiatives facilitates that goal. It is TCO Developments opinion that the OECD Due Diligence Guidance for Responsible Supply Cain of Conflict-Affected or High-risk Areas is the most ambitious approach in the list.

- *The OECD Due Diligence Guidance for Responsible Supply Chains of Minerals from Conflict-Affected and High-Risk Areas* ("the Guidance"). Brands require suppliers to disclose their sourcing origins of conflict minerals by using a questionnaire template such as the EICC 'Conflict Minerals Reporting Template' or similar in order to prevent the potential use of conflict minerals.
- *iTSCi* - ITRI represent tin producers and smelters. This program is a supply chain initiative to verify and trace minerals from the mine to smelter (traceability tagging). Although full membership is focused on upstream companies (Mining, Smelters etc) an Associate membership for downstream companies exists (manufacturers etc). Associate members contribute to the financing of the iTSCi program and so keep informed of initiative activities, specific mining sites whilst they support development in Africa.

  ***For more information*:**

  https://www.itri.co.uk/index.php?option=com_zoo&view=item&Itemid=191
- *Conflict-free Tin Initiative* (CFTI); sources conflict-free tin from the South Kivu province of DRC that implements the ITRI Tin Supply Chain Initiative (iTSCi) the due diligence and traceability system
- *The Public-Private Alliance for Responsible Minerals Trade* (PPA) is a multi-sector and multi-stakeholder initiative that provides funding and support to systems that trace and certify mineral supply chains in the DRC and Great Lakes Region. http://www.resolv.org/site-ppa/

- Other relevant in-region initiative. Initiatives not given in the list but prove active commitment to an initiative that aims at increasing legitimately sourced minerals.

  Examples of other relevant initiatives that are approved:

  - *Solutions for Hope* (SfH); sources conflict-free tantalum from the Katanga province of DRC (incorporates the iTSCi process and CFS program).
  - *The Certified Trading Chains* initiative (CTC) is a program supported by the German government and certifies mines to defined performance standards

- Member of the EICC & GeSi *Conflict-Free Sourcing Initiative* (CFSI). Members contribute to a number of tools and resources including the Conflict Minerals Reporting Template; supporting in-region sourcing schemes and the Conflict Free Smelter Program (identification of Smelters and Refiners that source conflict-free minerals).

B.7.3.3 The verification process

At least one of the options in the mandate box shall be marked. Every initiative the Brand is a participant in shall be provided. The following shall occur before the verifier may issue a verification of compliance.

- The template shall be completed by the responsible person at the brand owner company.
- The brand shall complete the TCO Certified Conflict Mineral Questionnaire and submit it and any required supporting documents for review. The verifier then assesses compliance and issues the verification report.

Supporting documents

- If the brand has a management system covering conflict minerals within its supply chain which it states are based on the OECD Due Diligence guidelines, then a supporting document that outlines those due diligence measures shall be submitted. Example of proof are:
  - Due Diligence Roadmap, Sustainability report or Conflict Mineral Report asserting the OECD five step framework.
  - Link to where information/findings are posted on the brand's website.
- The brand shall provide a copy of its conflict mineral policy and state where the information is made public.
- If the brand is part of an in-region initiative or the EICC CFSI, then supporting documents or links to relevant websites shall be provided to the approved verifier in order for them to verify participation.
- If the brand marks the option 'Other relevant initiative', then the name of the initiative shall be entered into the template and information on the initiative (or website) shall be submitted to the verifier and they will contact TCO Development in order to make a joint assessment before it can be accepted as an option. Although unlikely, any additional review fee entailed for an extra assessment will be charged to the applicant, after receiving the applicant's consent.
- When the application is satisfactory, the verifier notes on the verification report the fulfilled options and the type of supporting documentation.

Back to A.7.3